YAMAHA

PARTS CATALOGUE

XP560D (B7M1) EUROPE

1VB7M-300E1

( )

YAMAHA GENUINE Parts & Accessories

2020/3/13

NEWS NO.	DATE	COMMENT
PE0-MC-200015	Feb.,26,2020	COR:FIG.45 ELECTRICAL 2 ILLUSTRATION CORRECTION

XP560D
PARTS CATALOGUE
©2019 by Yamaha Motor Co., Ltd.
1st edition, November 2019
All rights reserved.
Any reprinting or unauthorized use
without the written permission of
Yamaha Motor Co., Ltd.
is expressly prohibited.
Printed in Japan.

FOREWORD

This Parts Catalogue is related to the parts for the model(s) on the cover page. When you are ordering replacement parts, please refer to this Parts Catalogue and quote both part numbers and part names correctly.

1. Modifications or additions which have been made after the issue of the Parts Catalogue will be announced in the Parts News.
   It is advisable that you make the necessary corrections to the Parts Catalogue according to the Parts News.

2. Abbreviations
   The following abbreviations are used in this Parts Catalogue.

   "UR" Use specified parts number.

   "UN" Use as many as needed.

   "AP" Alternate Parts

   "LM" Locally Made (Parts need to be ordered locally)

   "F#" Frame No. (Applicable machine No.)

   "O/S" Over Size

3. The number of components for assembly
   - Parts, which are to be supplied in an assembly, are listed with a dot (.) in front of the part name as shown below.
   - The numeral appearing to the right of each component part indicates the quantity of parts for each assembly unit.

PART NO.	DESCRIPTION	Q'TY	REMARKS
2F5–83310–60	FRONT FLASHER LIGHT ASSY	2	
115–83311–60	.BULB (6V–18W)	1	

4. Applicable colours of graphics are represented in the "REMARKS" as shown below.

PART NO.	DESCRIPTION	Q'TY	REMARKS
2N4–24110–00–X5	FUEL TANK COMP.	2	MXR
3J1–24240–10	.GRAPHIC, FUEL TANK	1	FOR MXR

5. Note that the illustrations for reference in finding parts numbers are not to be used for assembling. When assembling, please use the applicable service manual.

6. The asterisk (*) before a reference number indicates modified items after the first edition.

7. Applicable Serial No.

Engine Serial No.

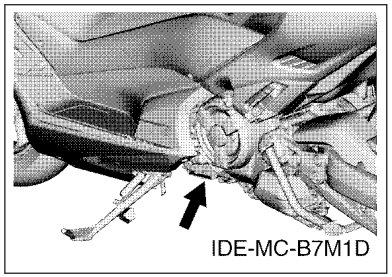

Frame Serial No.

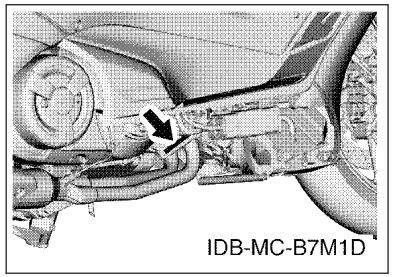

8. Applicable Colour Code (The (*) mark shows Model colour.)

Abbreviation	Colour Name	Colour Code
MBL2	MAT BLACK 2	0582
MDNM8(*)	MAT DARK GRAY METALLIC 8	1654
MDNMA(*)	MAT DARK GRAY METALLIC A	1760
NG	NEBURA GOLD	008L
SMX	BLACK METALLIC X	0903

MODEL LABEL

(1) A label called “Model Label” is affixed in the location as indicated in (3) below. When using this parts catalogue, please be sure to cross–reference the “model code – production code No.” in the catalogue with the “model code – production code No.” indicated on the Model Label affixed onto the product concerned.

(2) “Model Label” Indication

	a b	
○	xxxx – xxx	
●	x c	

a: Model Type Code
b: Production Code No.
c: Colouring Type

○	4TW1–010
●	A

(3) Model Label Affixing Location

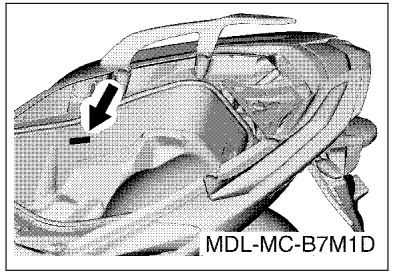

(4) Colouring Information

Model Code	Colouring Type Code	Colour Code	Colour Name	Abbreviation
B7M1	A	1760	MAT DARK GRAY METALLIC A	MDNMA
	B	1654	MAT DARK GRAY METALLIC 8	MDNM8

(5) Model Code – Production Code Number of Model Listed in This Parts Catalogue

Model Code	Production Code No.	Country (destination)
B7M1	010	AUSTRIA
		CZECHO
		FINLAND
		FRANCE
		GERMANY
		HUNGARY
		ITALY
		SLOVAK
		SPAIN
		SWITZERLAND
	050	CROATIA
		CYPRUS
		GREECE
		IRELAND
		POLAND
		SLOVENIA
		TURKEY
	060	UNITED KINGDOM

Model Code	Production Code No.	Country (destination)

CONTENTS

ENGINE

CYLINDER....1
CRANKSHAFT & PISTON....2
VALVE....4
CAMSHAFT & CHAIN....6
WATER PUMP....7
RADIATOR & HOSE....8
OIL PUMP....10
INTAKE....11
INTAKE 2....12
EXHAUST....13
CRANKCASE....15
CRANKCASE COVER 1....16
CRANKCASE COVER 2....17
STARTER....19
CLUTCH....20
CLUTCH 2....21
TRANSMISSION....23

CHASSIS

FRAME....24
FENDER....27
SIDE COVER....28
SIDE COVER 2....31
REAR ARM & SUSPENSION....33
STEERING....36
FRONT FORK....37
FUEL TANK....39
SEAT....41
SEAT 2....43
FRONT WHEEL....45
FRONT BRAKE CALIPER....46
REAR WHEEL....47
REAR BRAKE CALIPER....48
STEERING HANDLE & CABLE....50
FRONT MASTER CYLINDER....52
STAND & FOOTREST....54
STAND & FOOTREST 2....56
LEG SHIELD....58
WINDSHIELD....60
GENERATOR....63
FLASHER LIGHT....64
METER....65
HEADLIGHT....66
TAILLIGHT....67
HANDLE SWITCH & LEVER....68
ELECTRICAL 1....69
ELECTRICAL 2....72
ELECTRICAL 3....73

INDEX

NUMERICAL INDEX....74

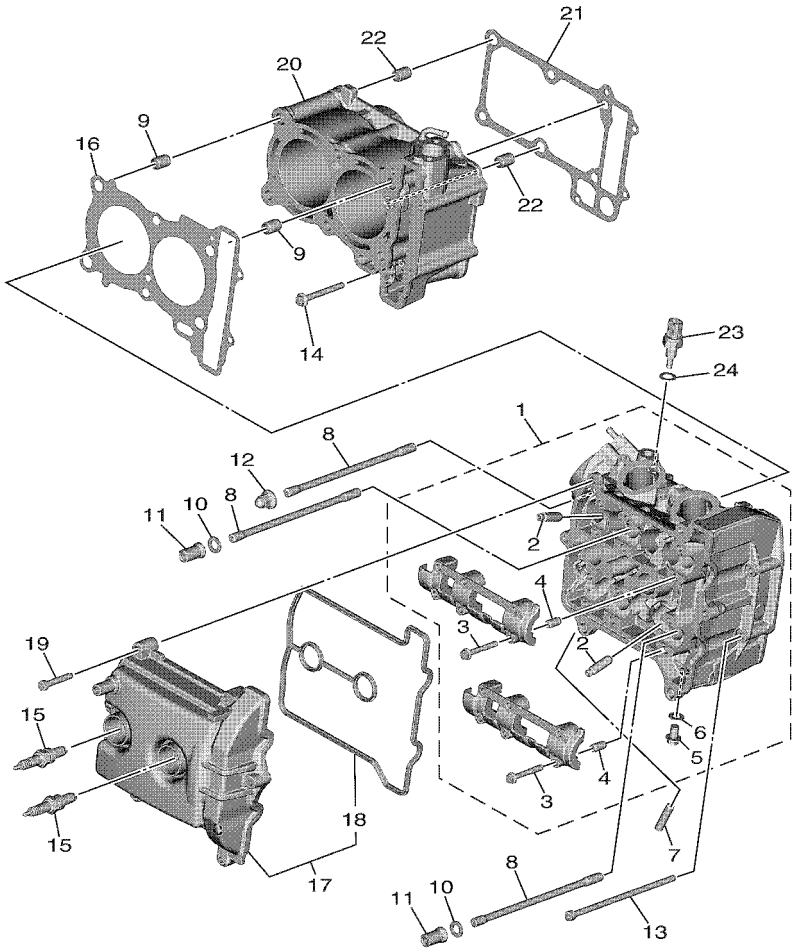

B7M1300DV010

FIG. 1 CYLINDER

REF. NO.	PART NO.	DESCRIPTION	B7M1					REMARKS
1	B7M–11101–09	CYLINDER HEAD ASSY	1					
2	5NL–11133–10	.GUIDE, VALVE 1	8					
3	90105–06027	.BOLT, FLANGE	12					
4	91808–16023	.PIN, DOWEL	2					
5	95E32–08012	.BOLT, FLANGE DEEP RECESS	1					
6	90430–08119	.GASKET	1					
7	95612–08618	BOLT, STUD	4					
8	90116–09584	BOLT, STUD	6					
9	93612–16254	PIN, DOWEL	2					
10	90201–090P4	WASHER, PLATE	4					
11	90179–09612	NUT	4					
12	90176–09001	NUT, CROWN	2					
13	90110–06021	BOLT, HEXAGON SOCKET HEAD	2					
14	90110–06379	BOLT, HEXAGON SOCKET HEAD	1					
15	94701–00443	PLUG, SPARK (NGK LMAR7G)	2					
16	B7M–11181–00	GASKET, CYLINDER HEAD 1	1					
17	B7M–11190–00	COVER, CYLINDER HEAD 1	1					
18	B7M–11193–00	.GASKET, HEAD COVER 1	1					
19	91312–06035	BOLT, HEXAGON SOCKET HEAD	6					
20	B7M–11310–09	CYLINDER	1					
21	59C–11351–00	GASKET, CYLINDER	1					
22	93612–16254	PIN, DOWEL	2					
23	4P9–83591–00	THERMO UNIT	1					
24	90430–10004	GASKET	1					

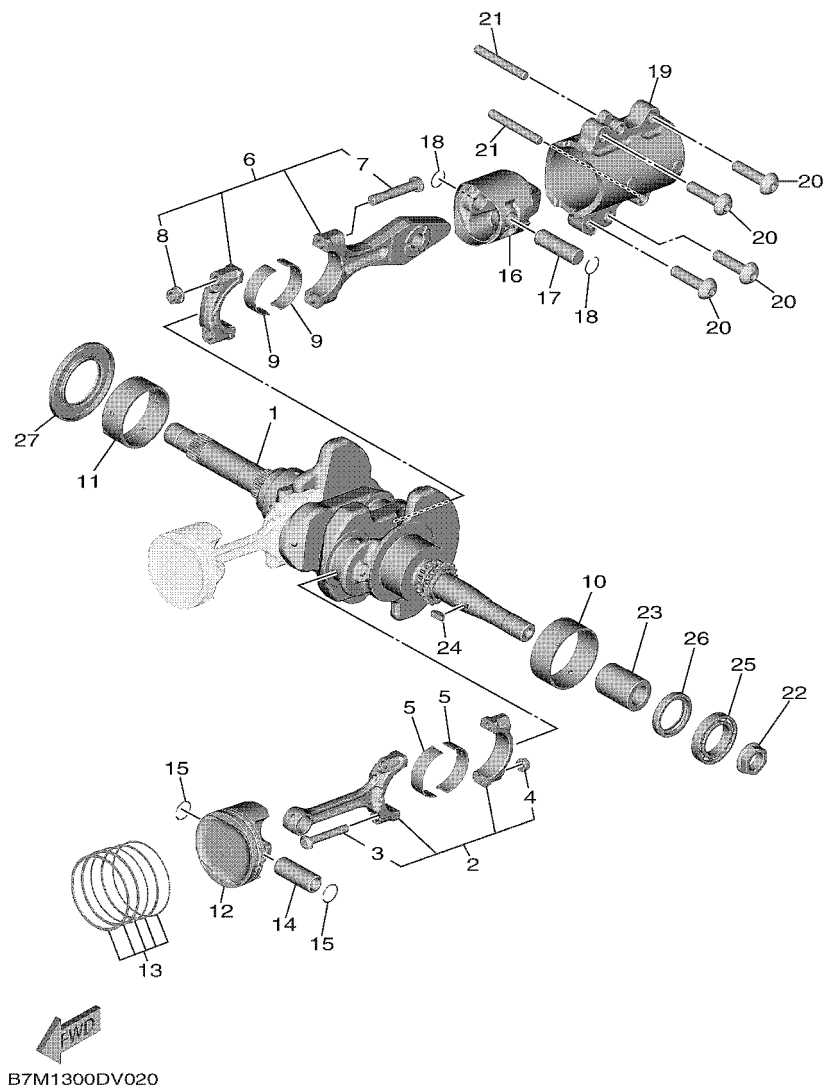

FIG. 2 CRANKSHAFT & PISTON

REF. NO.	PART NO.	DESCRIPTION	B7M1					REMARKS
1	B7M–11400–01	CRANKSHAFT ASSY	1					
2	B7M–11650–00	CONNECTING ROD ASSY	2					
3	5VU–11654–00	.BOLT, CONNECTING ROD	2					
4	90179–07652	.NUT	2					
5	B7M–11656–00	PLANE BEARING, CONNECTING ROD	4					UR BLUE
	B7M–11656–10	PLANE BEARING, CONNECTING ROD	4					UR BLACK
	B7M–11656–20	PLANE BEARING, CONNECTING ROD	4					UR BROWN
	B7M–11656–30	PLANE BEARING, CONNECTING ROD	4					UR GREEN
6	59C–11660–10	CONNECTING ROD ASSY	1					
7	4X7–11654–01	.BOLT, CONNECTING ROD	2					
8	90179–09379	.NUT	2					
9	B7M–11656–00	PLANE BEARING, CONNECTING ROD	2					UR BLUE
	B7M–11656–10	PLANE BEARING, CONNECTING ROD	2					UR BLACK
	B7M–11656–20	PLANE BEARING, CONNECTING ROD	2					UR BROWN
	B7M–11656–30	PLANE BEARING, CONNECTING ROD	2					UR GREEN
10	B7M–11416–00	PLANE BEARING, CRANKSHAFT 1	1					UR BLUE
	B7M–11416–10	PLANE BEARING, CRANKSHAFT 1	1					UR BLACK
	B7M–11416–20	PLANE BEARING, CRANKSHAFT 1	1					UR BROWN
	B7M–11416–30	PLANE BEARING, CRANKSHAFT 1	1					UR GREEN
	B7M–11416–40	PLANE BEARING, CRANKSHAFT 1	1					UR YELLOW
	B7M–11416–A0	PLANE BEARING, CRANKSHAFT 1	1					UR WHITE
11	B7M–11417–00	PLANE BEARING, CRANKSHAFT 2	1					UR BLUE
	B7M–11417–10	PLANE BEARING, CRANKSHAFT 2	1					UR BLACK
	B7M–11417–20	PLANE BEARING, CRANKSHAFT 2	1					UR BROWN
	B7M–11417–30	PLANE BEARING, CRANKSHAFT 2	1					UR GREEN
	B7M–11417–40	PLANE BEARING, CRANKSHAFT 2	1					UR YELLOW
	B7M–11417–A0	PLANE BEARING, CRANKSHAFT 2	1					UR WHITE

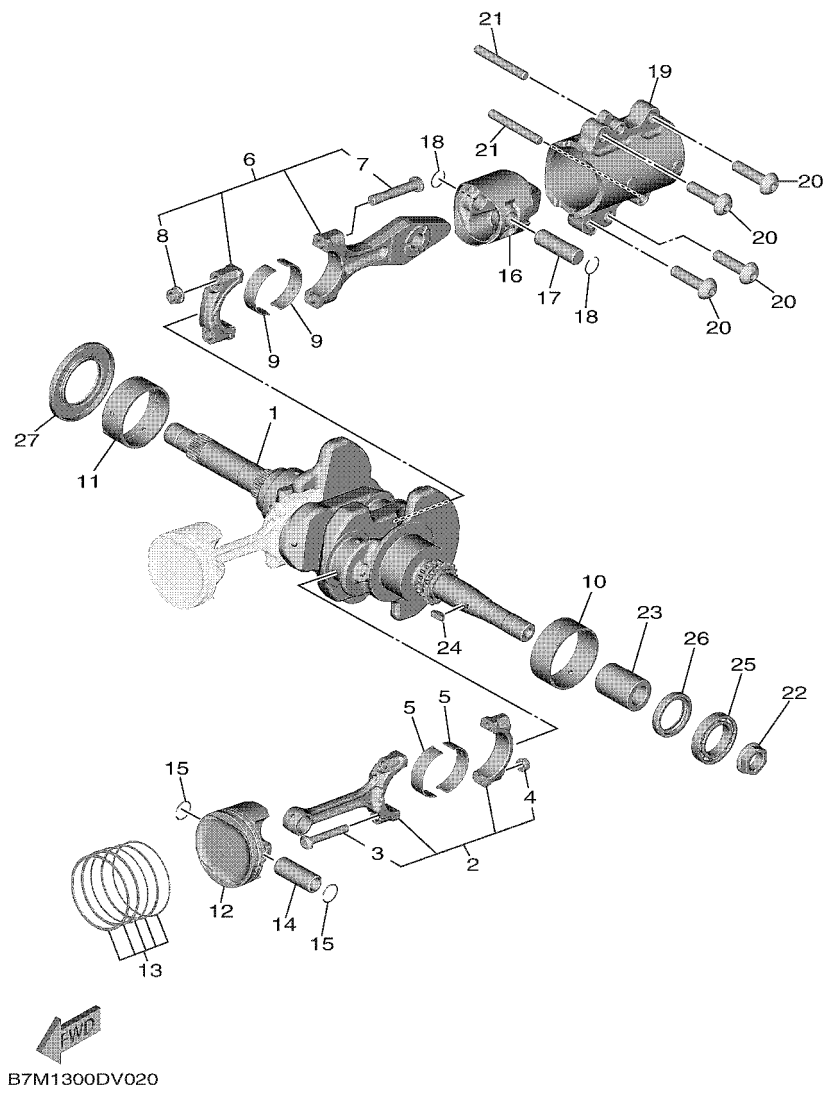

FIG. 2 CRANKSHAFT & PISTON

REF. NO.	PART NO.	DESCRIPTION	B7M1					REMARKS
12	B7M–11631–00	PISTON (STD)	2					
13	B7M–11603–00	PISTON RING SET (STD)	2					
14	B7M–11633–00	PIN, PISTON	2					
15	93450–18157	CIRCLIP	4					
16	BC3–11642–01–A0	PISTON 2 (STD)	1					
17	5GJ–11455–10	SHAFT 1	1					
18	93450–16068	CIRCLIP	2					
19	59C–11312–00	SLEEVE, CYLINDER	1					
20	90111–10026	BOLT,HEX. SOCKET BUTTON	4					
21	93608–60001	PIN, DOWEL	2					
22	90179–18007	NUT	1					
23	90387–18001	COLLAR	1					
24	90280–05048	KEY, WOODRUFF	1					
25	93306–90602	BEARING	1					
26	93101–30001	OIL SEAL	1					
27	93102–44008	OIL SEAL	1					

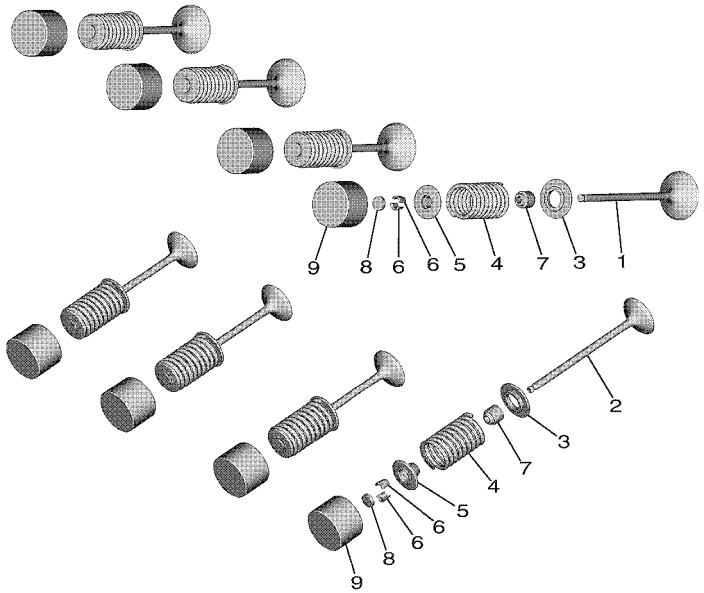

BC31300DS030

FIG. 3 VALVE

REF. NO.	PART NO.	DESCRIPTION	B7M1					REMARKS
1	B7M–12111–00	VALVE, INTAKE	4					
2	59C–12121–01	VALVE, EXHAUST	4					
3	8GC–12126–00	SEAT, VALVE SPRING 2	8					
4	59C–12113–00	SPRING, VALVE INNER	8					
5	3TJ–12117–00	RETAINER, VALVE SPRING	8					
6	1HX–12118–00	LOCK, VALVE SPRING RETAINER	16					
7	4TV–12119–00	SEAL, VALVE STEM	8					
8	1HX–12168–00	PAD, ADJUSTING 2 (1.20)	8					UR
	1HX–12168–20	PAD, ADJUSTING 2 (1.25)	8					UR
	1HX–12168–40	PAD, ADJUSTING 2 (1.30)	8					UR
	1HX–12168–60	PAD, ADJUSTING 2 (1.35)	8					UR
	1HX–12168–80	PAD, ADJUSTING 2 (1.40)	8					UR
	1HX–12168–A0	PAD, ADJUSTING 2 (1.45)	8					UR
	1HX–12168–F0	PAD, ADJUSTING 2 (1.50)	8					UR
	1HX–12168–H1	PAD, ADJUSTING 2 (1.55)	8					UR
	1HX–12168–K1	PAD, ADJUSTING 2 (1.60)	8					UR
	1HX–12168–M1	PAD, ADJUSTING 2 (1.65)	8					UR
	1HX–12168–R1	PAD, ADJUSTING 2 (1.70)	8					UR
	1HX–12168–U1	PAD, ADJUSTING 2 (1.75)	8					UR
	1HX–12168–W1	PAD, ADJUSTING 2 (1.80)	8					UR
	1HX–12168–Y1	PAD, ADJUSTING 2 (1.85)	8					UR
	1HX–12169–11	PAD, ADJUSTING 2 (1.90)	8					UR
	1HX–12169–31	PAD, ADJUSTING 2 (1.95)	8					UR
	1HX–12169–50	PAD, ADJUSTING 2 (2.00)	8					UR
	1HX–12169–70	PAD, ADJUSTING 2 (2.05)	8					UR
	1HX–12169–90	PAD, ADJUSTING 2 (2.10)	8					UR
	1HX–12169–E0	PAD, ADJUSTING 2 (2.15)	8					UR

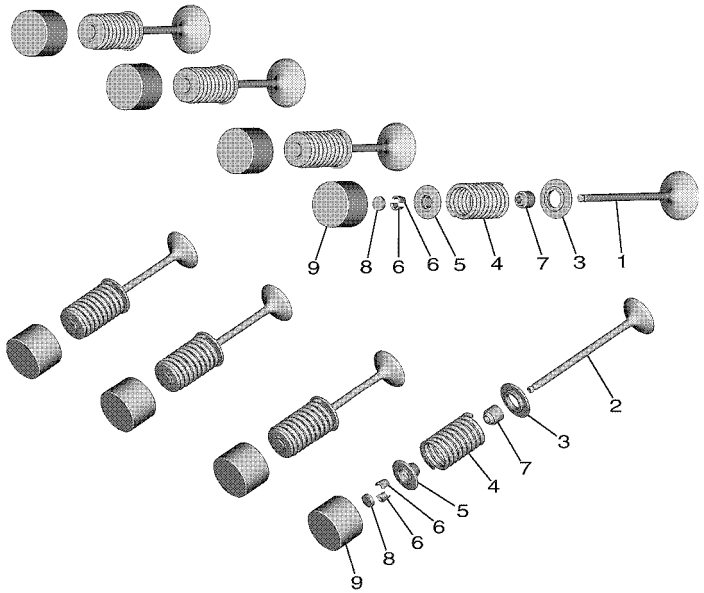

BC31300DS030

FIG. 3 VALVE

REF. NO.	PART NO.	DESCRIPTION	B7M1					REMARKS
8	1HX–12169–G0	PAD, ADJUSTING 2 (2.20)	8					UR
	1HX–12169–J0	PAD, ADJUSTING 2 (2.25)	8					UR
	1HX–12169–L0	PAD, ADJUSTING 2 (2.30)	8					UR
	1HX–12169–N0	PAD, ADJUSTING 2 (2.35)	8					UR
	1HX–12169–T0	PAD, ADJUSTING 2 (2.40)	8					UR
9	B7M–12153–10	LIFTER, VALVE	8					WHITE
	B7M–12153–09	LIFTER, VALVE (O/S)	8					AP ORANGE

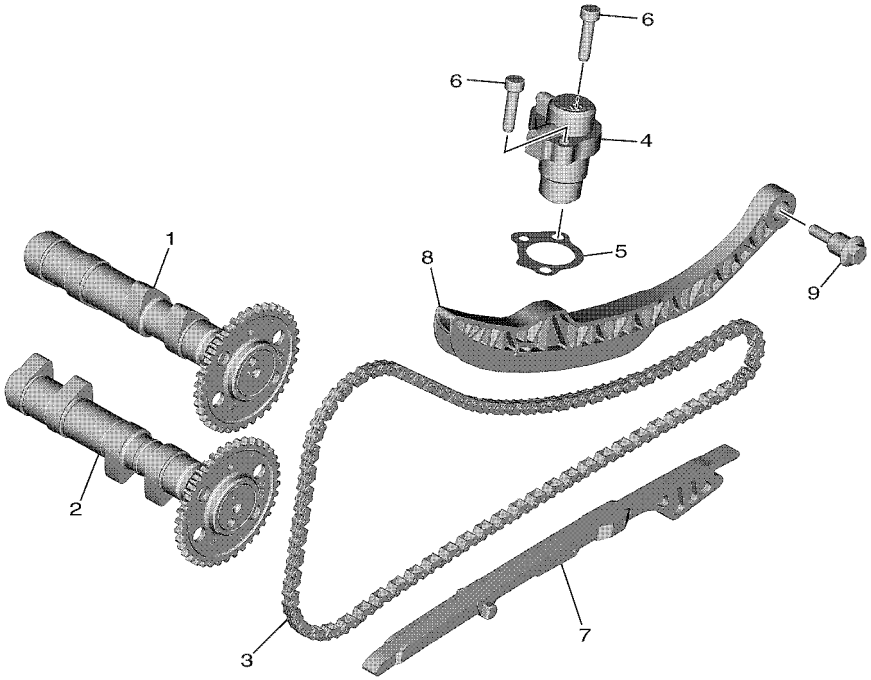

B7M1300DV040

FIG. 4 CAMSHAFT & CHAIN

REF. NO.	PART NO.	DESCRIPTION	B7M1					REMARKS
1	B7M–12170–00	CAMSHAFT ASSY 1	1					
2	B7M–12180–00	CAMSHAFT ASSY 2	1					
3	94591–53134	CHAIN	1					
4	B7M–12210–00	TENSIONER ASSY, CAM CHAIN	1					
5	15B–12213–00	GASKET, TENSIONER CASE	1					
6	91312–06025	BOLT, HEXAGON SOCKET HEAD	2					
7	59C–12251–00	DAMPER, CHAIN 1	1					
8	B7M–12252–00	DAMPER, CHAIN 2	1					
9	90109–06295	BOLT	1					

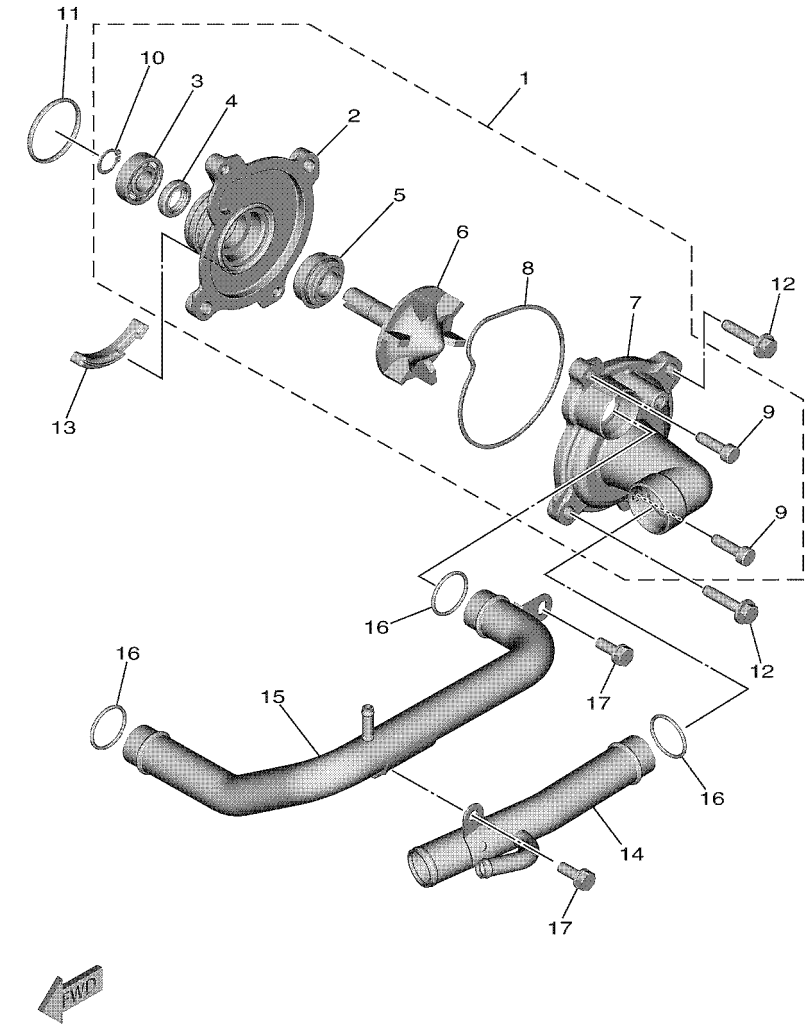

B7M1300DV050

FIG. 5 WATER PUMP

REF. NO.	PART NO.	DESCRIPTION	B7M1					REMARKS
1	59C–12420–10	WATER PUMP ASSY	1					
2	5VU–12421–00	.HOUSING, WATER PUMP	1					
3	93306–00106	.BEARING	1					
4	93102–12442	.OIL SEAL	1					
5	5VK–12438–00	.SEAL, MECHANICAL	1					
6	20S–12450–00	.IMPELLER SHAFT ASSY	1					
7	5GJ–12422–02	.COVER, HOUSING	1					
8	1WG–12439–00	.O-RING	1					
9	91312–06020	.BOLT, HEXAGON SOCKET HEAD	2					
10	99009–12400	.CIRCLIP	1					
11	93210–33133	O-RING	1					
12	90119–06M83	BOLT, WITH WASHER	2					
13	59C–12437–00	STOPPER	1					
14	B7M–12481–00	PIPE 1	1					
15	B7M–12482–00	PIPE 2	1					
16	93210–21190	O-RING	3					
17	90119–06270	BOLT, WITH WASHER	2					

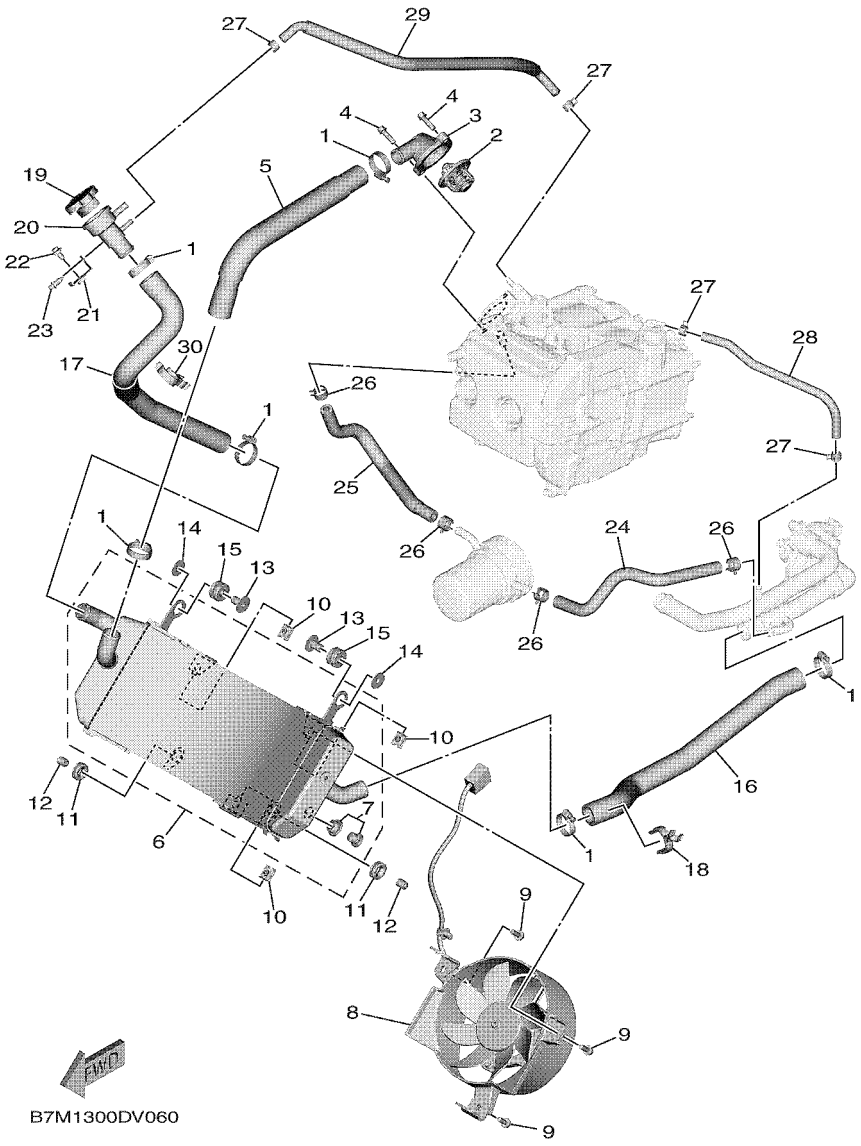

FIG. 6 RADIATOR & HOSE

REF. NO.	PART NO.	DESCRIPTION	B7M1					REMARKS
1	90450–32015	HOSE CLAMP ASSY	6					
2	1WS–12410–00	THERMOSTAT ASSY	1					
3	B7M–12413–00	COVER, THERMOSTAT	1					
4	95E32–06020	BOLT, FLANGE DEEP RECESS	2					
5	B7M–12483–00	PIPE 3	1					
6	B7M–12461–00	RADIATOR COMP	1					
7	5VU–12478–00	.COCK, DRAIN	1					
8	BC3–12405–00	BLOWER ASSY	1					
9	2S3–12675–00	BOLT, BLOWER HOLDING	3					
10	5SL–12671–00	NUT 1	3					
11	90480–16301	GROMMET	2					
12	90387–065L7	COLLAR	2					
13	90387–06065	COLLAR	2					
14	90201–06033	WASHER, PLATE	2					
15	90480–15363	GROMMET	2					
16	BC3–12476–00	PIPE 6	1					
17	BC3–12477–00	PIPE 7	1					
18	90464–28175	CLAMP	1					
19	5SL–12462–00	CAP, RADIATOR	1					
20	5GJ–12591–00	SUPT, FILLER NECK	1					
21	BC3–1244E–00	BRACKET 1	1					
22	90109–06264	BOLT	1					
23	90269–07014	RIVET	1					
24	B7M–1243A–00	HOSE 1	1					
25	B7M–1243E–00	HOSE 2	1					
26	90467–15001	CLIP	4					
27	90467–10038	CLIP	4					

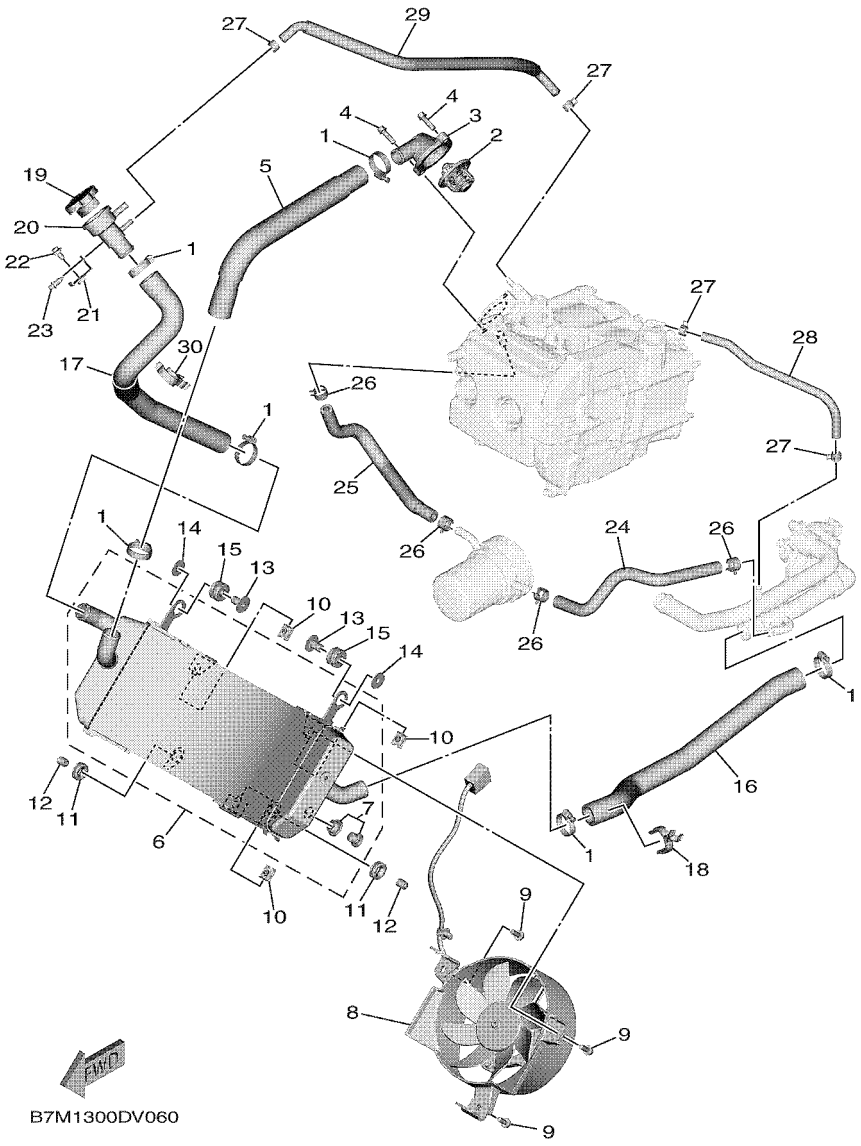

FIG. 6 RADIATOR & HOSE

REF. NO.	PART NO.	DESCRIPTION	B7M1					REMARKS
28	BC3–12589–00	HOSE 6	1					
29	B7M–12551–00	HOSE 7	1					
30	90464–23001	CLAMP	1					

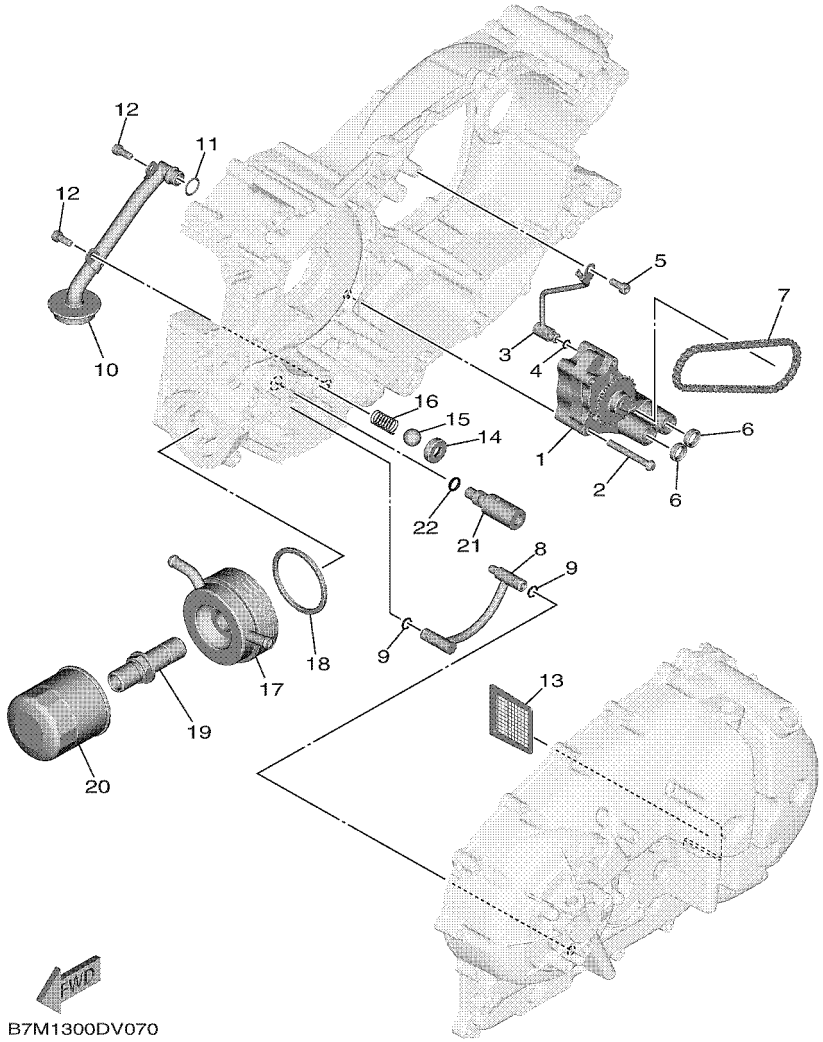

FIG. 7 OIL PUMP

REF. NO.	PART NO.	DESCRIPTION	B7M1					REMARKS
1	59C–13300–00	OIL PUMP ASSY	1					
2	92012–06050	BOLT, BUTTON HEAD	3					
3	5GJ–13161–00	PIPE, DELIVERY 1	1					
4	93210–06422	O-RING	1					
5	90110–06168	BOLT, HEXAGON SOCKET HEAD	1					
6	5GJ–13475–00	GASKET	2					
7	94580–25058	CHAIN (DID25 58L)	1					
8	5GJ–13405–00	OIL PIPE COMP. 1	1					
9	93210–09525	O-RING	2					
10	5GJ–13410–00	STRAINER HOUSING ASSY	1					
11	93210–14579	O-RING	1					
12	90110–06168	BOLT, HEXAGON SOCKET HEAD	2					
13	22F–13411–01	STRAINER, OIL	1					
14	3LD–13113–00	SEAT, CHECK BALL	1					
15	93505–08030	BALL	1					
16	90501–104F9	SPRING, COMPRESSION	1					
17	B7M–13470–00	OIL COOLER ASSY	1					
18	1XD–13475–00	GASKET	1					
19	90401–20009	BOLT, UNION	1					
20	5GH–13440–61	ELEMENT ASSY, OIL CLEANER	1					
21	4G0–13490–01	RELIEF VALVE ASSY	1					
22	93210–10096	O-RING	1					

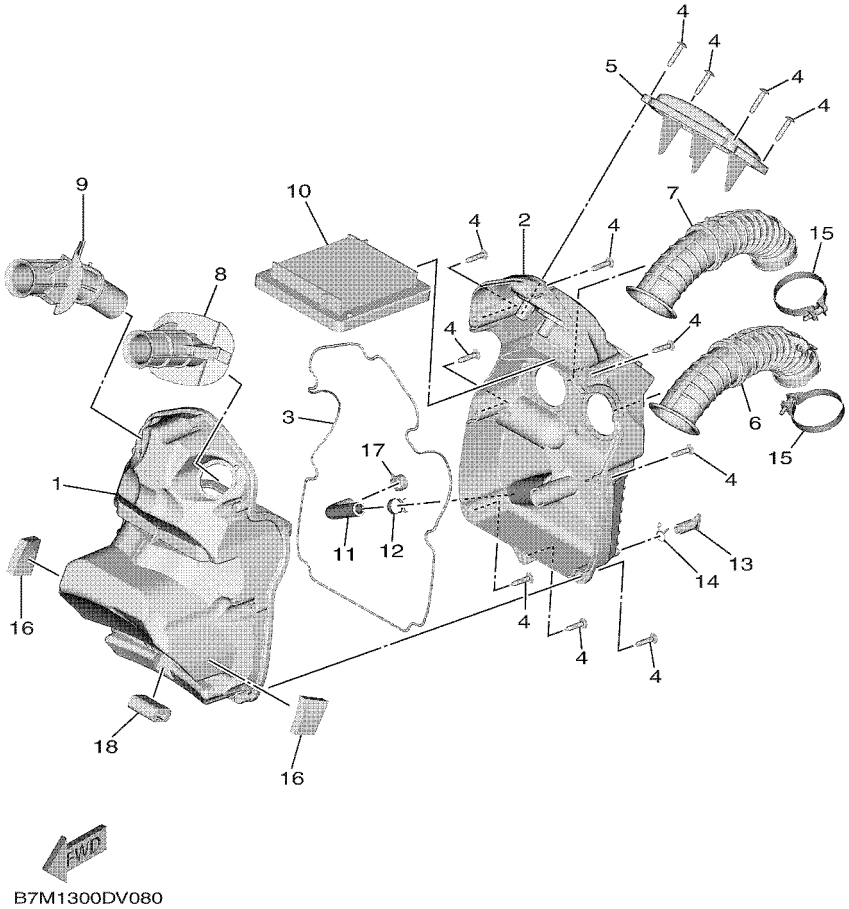

FIG. 8 INTAKE

REF. NO.	PART NO.	DESCRIPTION	B7M1					REMARKS
1	B7M–14411–00	CASE, AIR CLEANER 1	1					
2	B7M–14412–00	CAP, CLEANER CASE 1	1					
3	B7M–14452–00	SEAL	1					
4	90160–05013	SCREW, ROUND TAPPING	12					
5	B7M–1441A–00	COVER, CLEANER CASE 1	1					
6	B7M–14469–00	FUNNEL, AIR	1					
7	B7M–1446C–00	FUNNEL 2	1					
8	BC3–14437–00	DUCT	1					
9	BC3–1443A–00	DUCT	1					
10	B7M–14451–00	ELEMENT, AIR CLEANER	1					
11	B7M–11166–00	PIPE, BREATHER 1	1					
12	90467–15054	CLIP	1					
13	5XT–1443E–00	PIPE, DRAIN	1					
14	90467–11106	CLIP	1					
15	90450–46005	HOSE CLAMP ASSY	2					
16	90520–10036	DAMPER, PLATE	2					
17	90467–15001	CLIP	1					
18	B7M–14409–00	DAMPER	1					

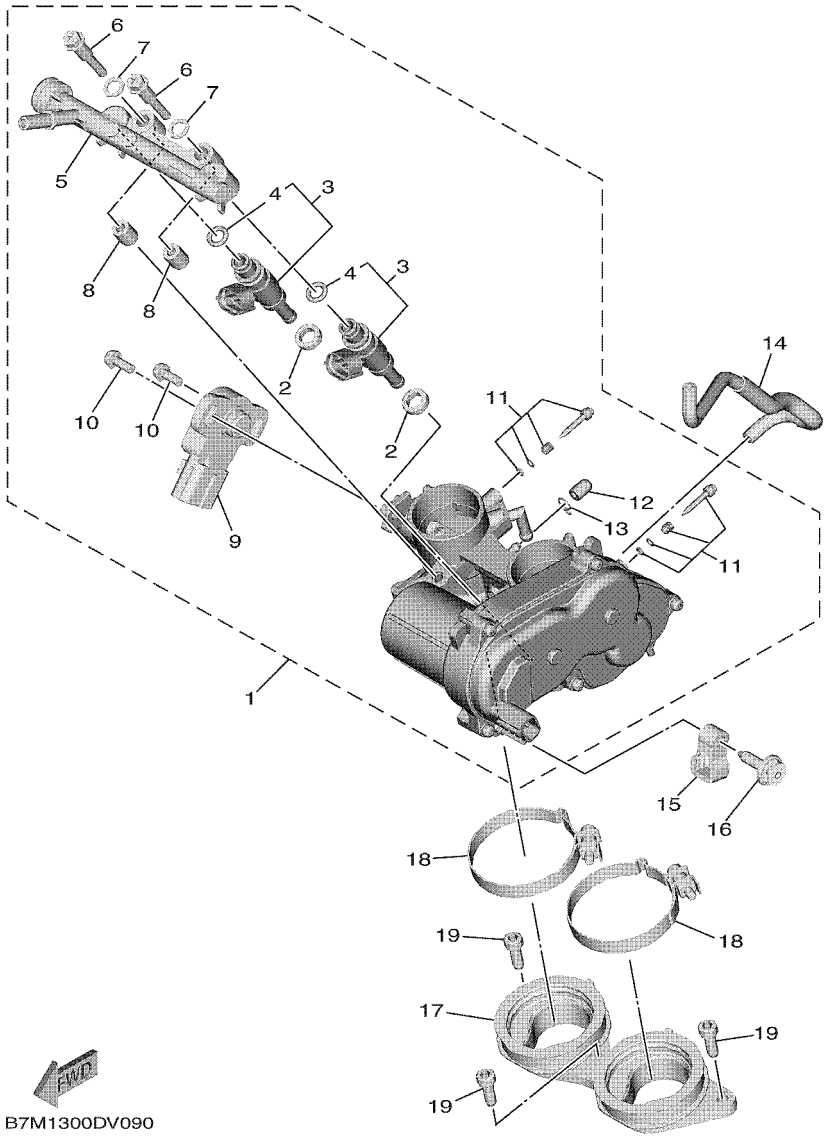

FIG. 9 INTAKE 2

REF. NO.	PART NO.	DESCRIPTION	B7M1					REMARKS
1	B7M–13750–00	THROTTLE BODY ASSY	1					
2	8FP–13556–00	.RUBBER, INJECTOR	2					
3	1WS–13761–00	.INJECTOR	2					
4	5PS–14147–00	..O-RING	1					
5	B7M–13938–00	.PIPE	1					
6	8HG–13573–00	.BOLT 1	2					
7	8GL–13571–00	.WASHER	2					
8	8HG–14534–00	.COLLAR	2					
9	B7M–85885–00	.THROTTLE SENSOR ASSY	1					
10	8CC–14216–10	.SCREW	2					
11	2C0–14105–00	.PILOT SCREW SET	2					
12	895–14169–00	.CAP	1					
13	8A7–14139–00	.CLIP, PIPE	1					
14	B7M–13542–00	HOSE, VACUUM SENSING 1	1					
15	B7M–14435–00	GROMMET	1					
16	90269–06010	RIVET	1					
17	B7M–13635–00	JOINT, INTAKE 1	1					
18	90450–56009	HOSE CLAMP ASSY	2					
19	91312–06016	BOLT, HEXAGON SOCKET HEAD	3					

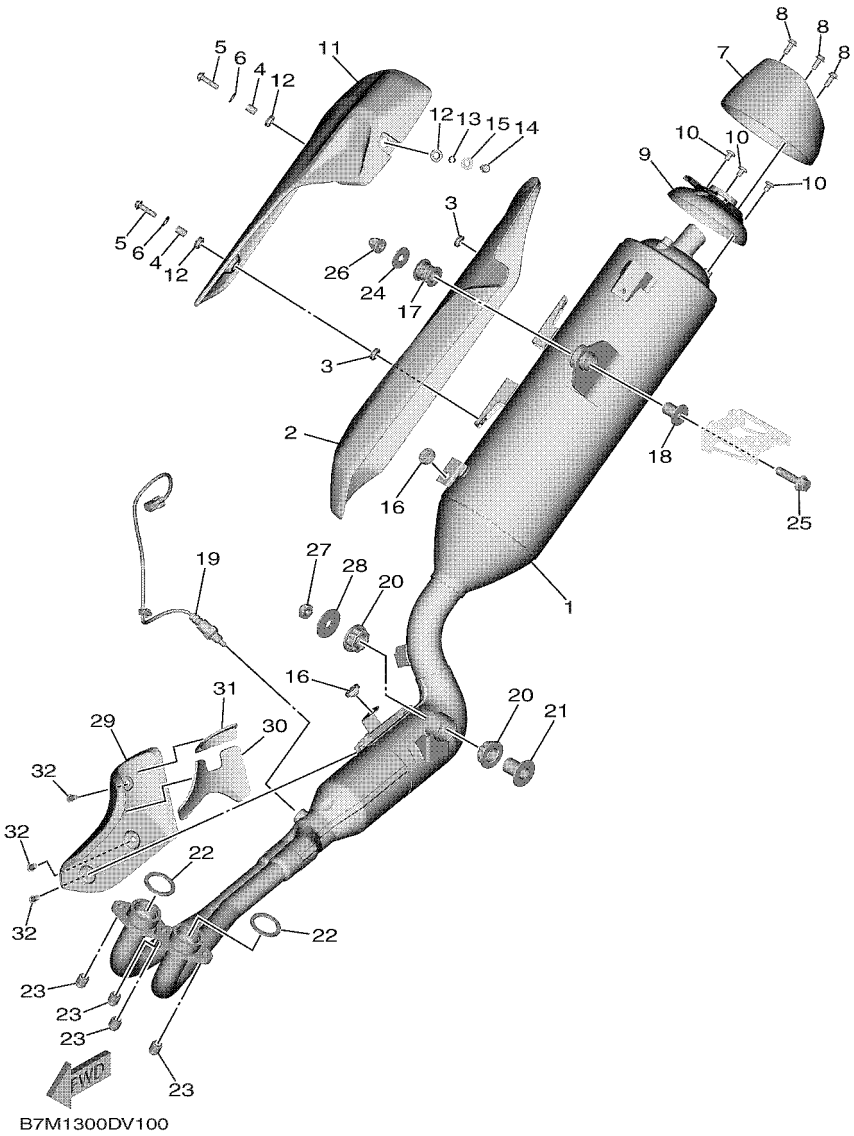

FIG. 10 EXHAUST

REF. NO.	PART NO.	DESCRIPTION	B7M1					REMARKS
1	B7M–14703–00	MUFFLER COMP. 1	1					
2	B7M–1465T–00	PLATE, PROTECTOR 2	1					
3	90480–12581	GROMMET	2					
4	90387–06317	COLLAR	2					
5	90111–06066	BOLT,HEX. SOCKET BUTTON	2					
6	90201–062G3	WASHER, PLATE	2					
7	B7M–14799–00	CAP	1					
8	90111–06015	BOLT,HEX. SOCKET BUTTON	3					
9	BC3–14629–00	STAY, PROTECTOR	1					
10	98980–06008	SCREW, BIND	3					
11	BC3–14718–00	PROTECTOR, MUFFLER 1	1					
12	90480–12581	GROMMET	3					
13	90387–06141	COLLAR	1					
14	90111–06015	BOLT,HEX. SOCKET BUTTON	1					
15	90201–062G3	WASHER, PLATE	1					
16	22W–24181–00	DAMPER, LOCATING 1	2					
17	36Y–27424–01	DAMPER, FOOTREST 2	1					
18	90387–10046	COLLAR	1					
19	BC3–8592A–10	SENSOR, OXYGEN	1					
20	B7M–27424–00	DAMPER, FOOTREST 2	2					
21	B7M–14648–00	COLLAR 2	1					
22	4BR–14613–00	GASKET, EXHAUST PIPE	2					
23	90179–08442	NUT	4					
24	90201–10669	WASHER, PLATE	1					
25	95D32–10040	BOLT, FLANGE DEEP RECESS	1					
26	90176–10075	NUT, CROWN	1					
27	90185–10022	NUT, SELF-LOCKING	1					

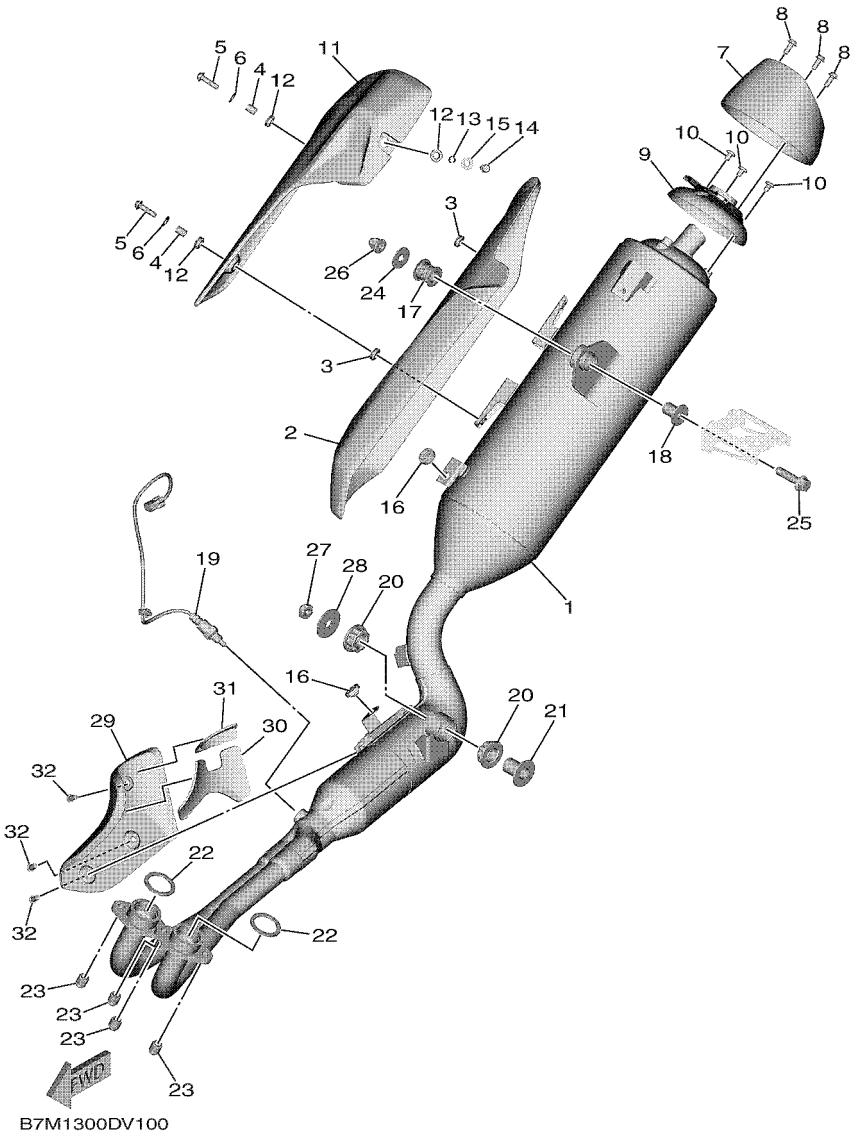

FIG. 10 EXHAUST

REF. NO.	PART NO.	DESCRIPTION	B7M1					REMARKS
28	90201–10071	WASHER, PLATE	1					
29	BC3–14738–00	PROTECTOR, MUFFLER 3	1					
30	B7M–1475P–00	SEAT	1					
31	B7M–1476P–00	SEAT	1					
32	90111–06183	BOLT,HEX. SOCKET BUTTON	3					

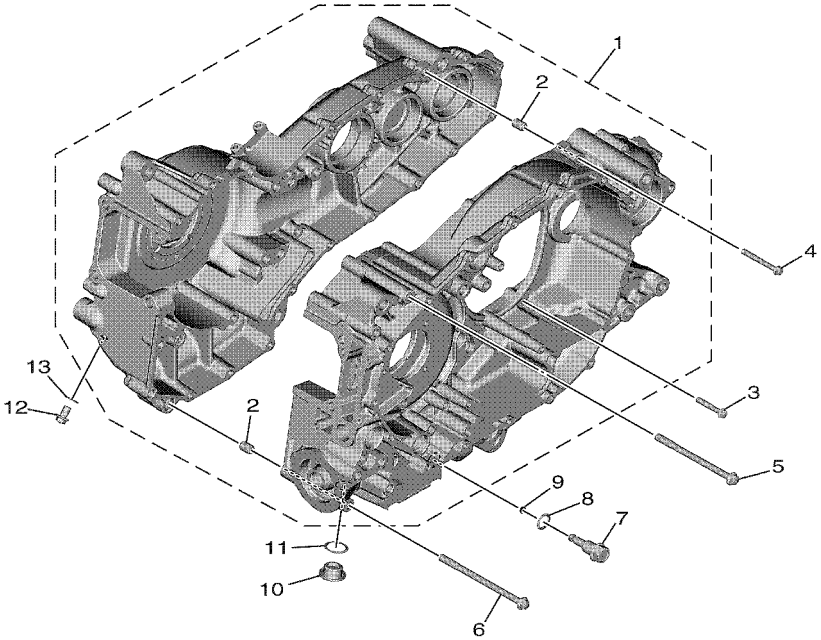

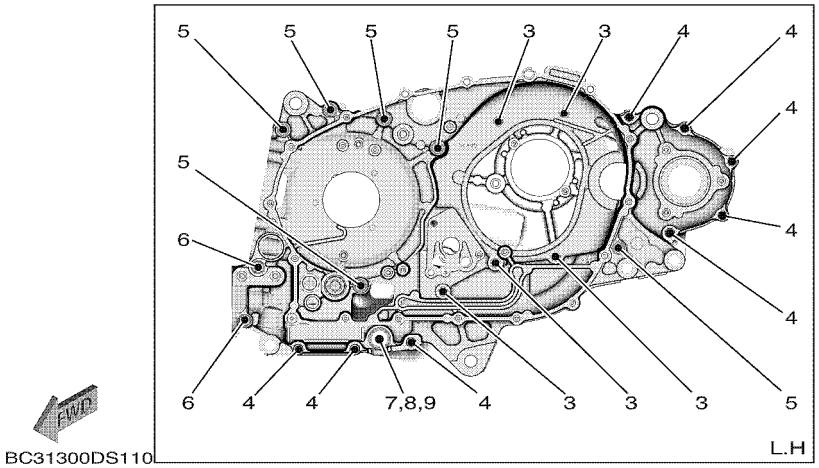

FIG. 11 CRANKCASE

REF. NO.	PART NO.	DESCRIPTION	B7M1					REMARKS
1	B7M–15100–09	CRANKCASE ASSY	1					
2	99530–10114	.PIN, DOWEL	2					
3	95E32–06035	BOLT, FLANGE DEEP RECESS	5					
4	95E32–06050	BOLT, FLANGE DEEP RECESS	8					
5	95022–08110	BOLT, FLANGE	6					
6	95022–08120	BOLT, FLANGE	2					
7	15B–15481–00	BOLT 1	1					
8	214–11198–01	GASKET	1					
9	93210–48364	O-RING	1					
10	4H7–15189–00	PLUG	1					
11	93210–22382	O-RING	1					
12	95E32–08012	BOLT, FLANGE DEEP RECESS	1					
13	90430–08119	GASKET	1					

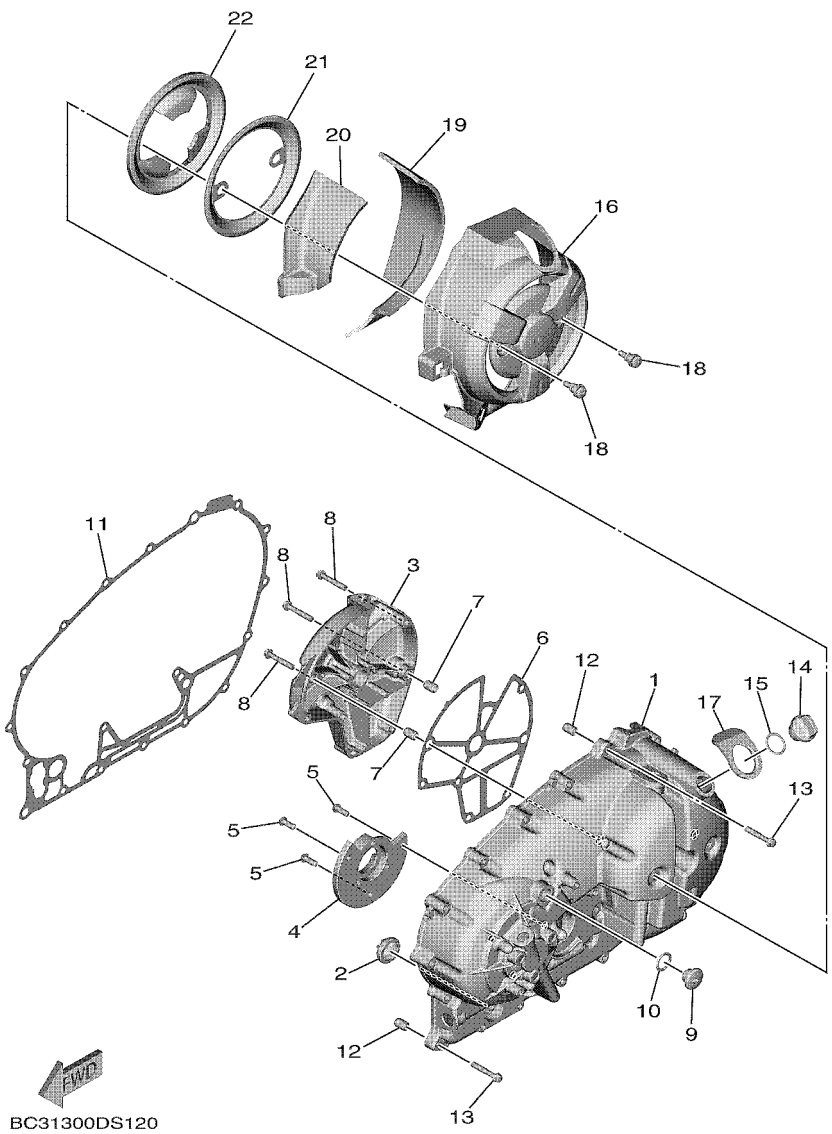

FIG. 12 CRANKCASE COVER 1

REF. NO.	PART NO.	DESCRIPTION	B7M1					REMARKS
1	59C–15411–10	COVER, CRANKCASE 1	1					
2	2H7–15361–00	GAUGE, LEVEL	1					
3	59C–15414–00	COVER 1	1					
4	5GJ–15417–00	COVER, CAP	1					
5	90149–06082	SCREW	3					
6	5GJ–15453–01	GASKET	1					
7	99530–10114	PIN, DOWEL	2					
8	95E32–06035	BOLT, FLANGE DEEP RECESS	7					
9	36Y–15189–00	PLUG	1					
10	93210–16325	O-RING	1					
11	B7M–15451–00	GASKET, CRANKCASE COVER 1	1					
12	99530–10114	PIN, DOWEL	2					
13	95E32–06035	BOLT, FLANGE DEEP RECESS	19					
14	5GJ–15363–10	PLUG, OIL	1					
15	93210–19123	O-RING	1					
16	BC3–15415–00	COVER, 1	1					
17	5GJ–15486–00	GROMMET	1					
18	2PW–15481–01	BOLT 1	2					
19	BC3–15316–00	DAMPER 1	1					
20	BC3–15335–00	DAMPER 3	1					
21	BC3–15499–00	PROTECTOR, COVER	1					
22	BC3–15789–00	DAMPER	1					

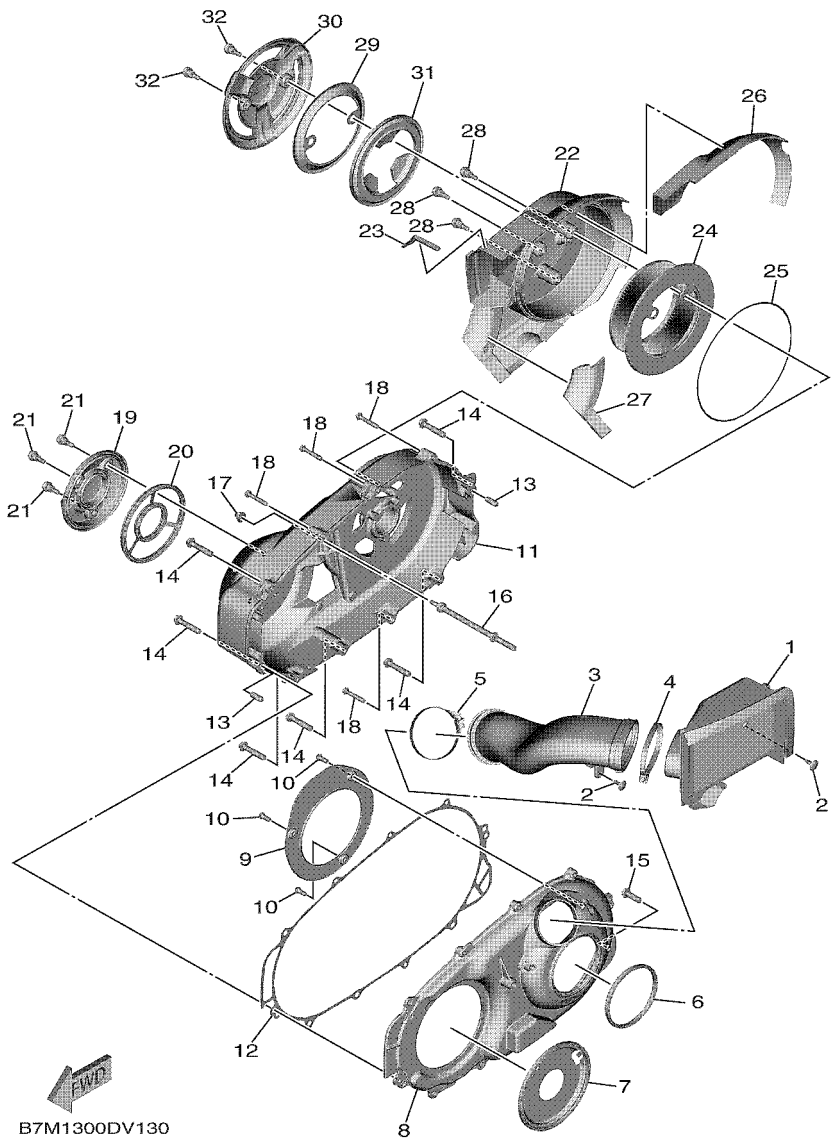

FIG. 13 CRANKCASE COVER 2

REF. NO.	PART NO.	DESCRIPTION	B7M1					REMARKS
1	B7M–15407–00	ELEMENT 1	1					
2	90269–05009	RIVET	2					
3	BC3–15473–00	DUCT, AIR	1					
4	90450–01002	HOSE CLAMP ASSY	1					
5	90450–74001	HOSE CLAMP ASSY	1					
6	5GJ–15474–00	SEAL, AIR DUCT	1					
7	15B–15191–00	PLATE	1					
8	59C–15431–00	COVER, CRANKCASE 3	1					
9	5GJ–15113–00	PLATE	1					
10	92012–06014	BOLT, BUTTON HEAD	3					
11	59C–15421–10	COVER, CRANKCASE 2	1					
12	59C–15461–00	GASKET, CRANKCASE COVER 2	1					
13	99480–08020	PIN	2					
14	95E32–08040	BOLT, FLANGE DEEP RECESS	6					
15	95E32–08025	BOLT, FLANGE DEEP RECESS	1					
16	59C–15768–00	BOLT	1					
17	90176–06017	NUT, CROWN	1					
18	95E32–06035	BOLT, FLANGE DEEP RECESS	4					
19	4B5–15492–00	COVER	1					
20	5GJ–1542A–00	DAMPER 1	1					
21	2PW–15481–01	BOLT 1	3					
22	BC3–15423–00	COVER 2	1					
23	90520–04016	DAMPER, PLATE	1					
24	59C–15408–00	ELEMENT 2	1					
25	48U–14452–00	SEAL	1					
26	59C–15326–10	DAMPER 2	1					
27	BC3–1542B–00	DAMPER 2	1					

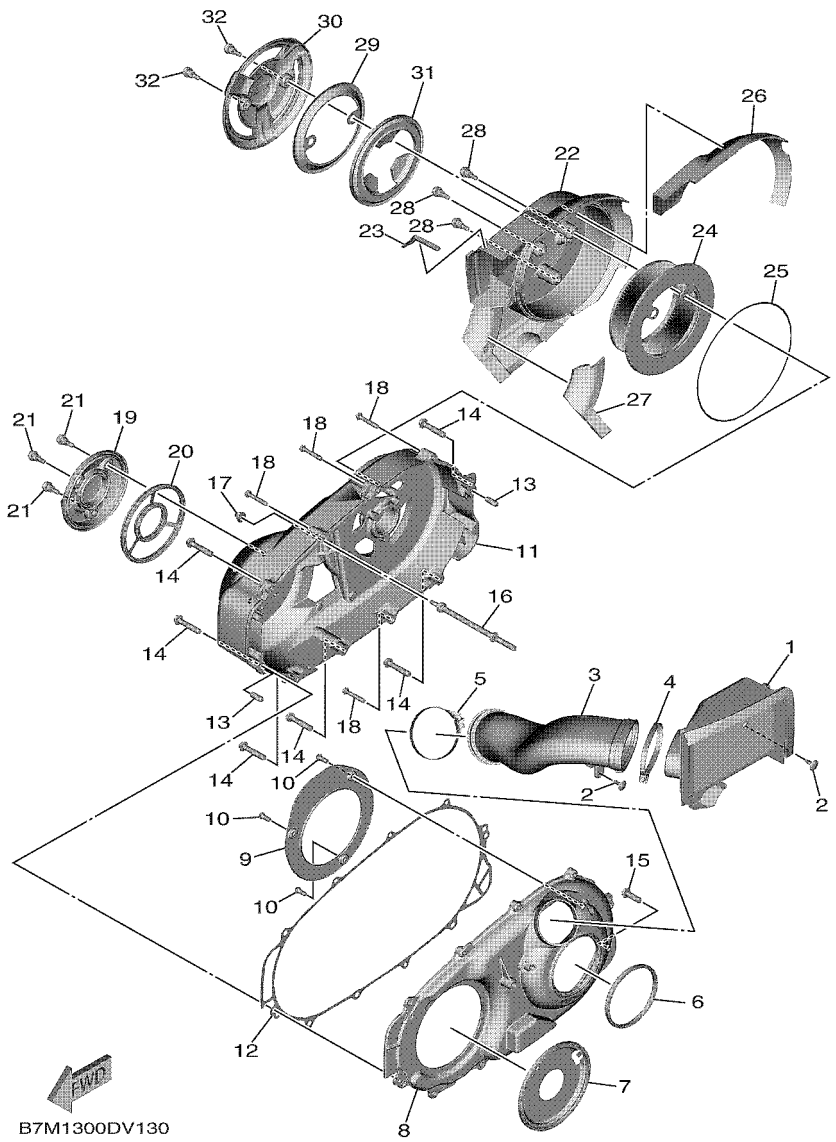

FIG. 13 CRANKCASE COVER 2

REF. NO.	PART NO.	DESCRIPTION	B7M1					REMARKS
28	2PW–15481–01	BOLT 1	3					
29	BC3–15499–00	PROTECTOR, COVER	1					
30	BC3–1543A–00	COVER, ELEMENT	1					
31	BC3–15789–00	DAMPER	1					
32	2PW–15481–01	BOLT 1	2					

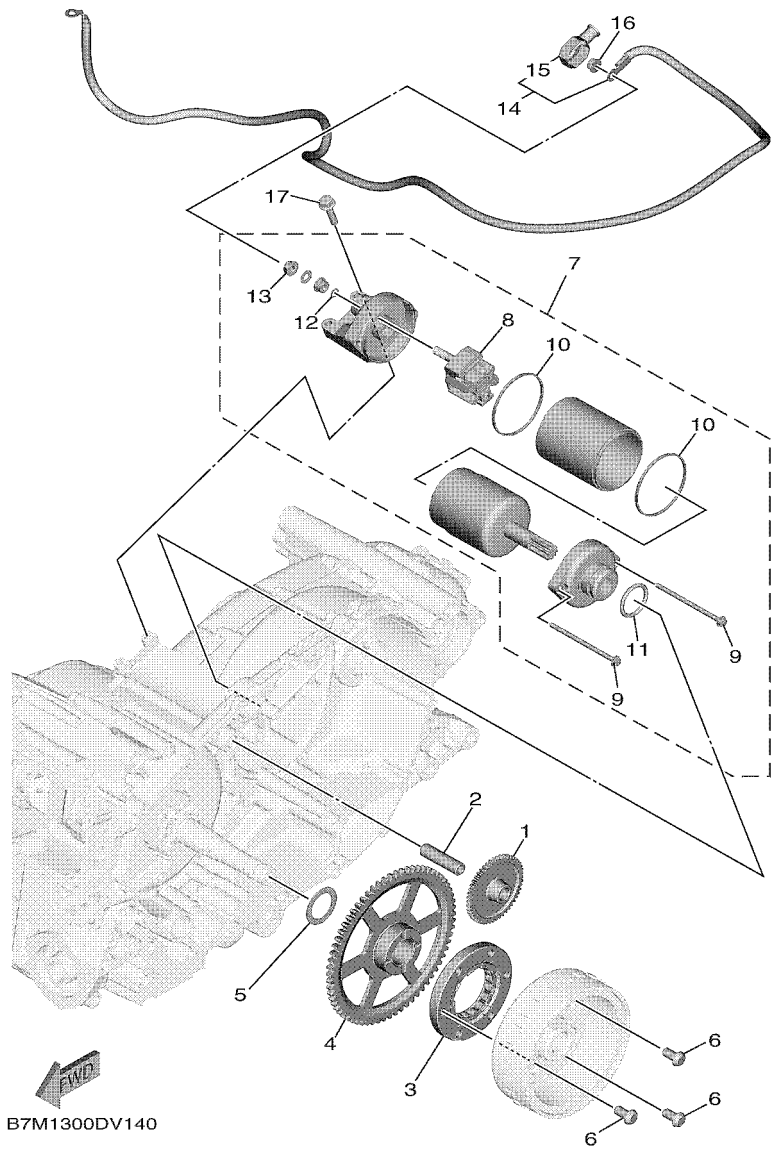

FIG. 14 STARTER

REF. NO.	PART NO.	DESCRIPTION	B7M1					REMARKS
1	B7M–15512–00	GEAR, IDLER 1	1					
2	36Y–15521–01	SHAFT 1	1					
3	1WS–15590–00	STARTER ONE-WAY ASSY	1					
4	B7M–15517–00	GEAR, IDLER 2	1					
5	90201–25290	WASHER, PLATE	1					
6	90149–08030	SCREW	3					
7	BC3–81890–00	MOTOR ASSY	1					
8	4B5–81840–00	.BRUSH HOLDER ASSY	1					
9	4B5–81826–00	.BOLT	2					
10	4B5–81844–00	.GASKET	2					
11	1FK–81847–00	.O-RING	1					
12	3TB–81847–00	.O-RING	1					
13	4XV–8182A–00	.NUT	1					
14	BC3–81815–00	CORD, STARTER MOTOR	1					
15	4B5–81871–00	.CAP	1					
16	4XV–8182A–00	NUT	1					
17	95D32–06025	BOLT, FLANGE DEEP RECESS	2					

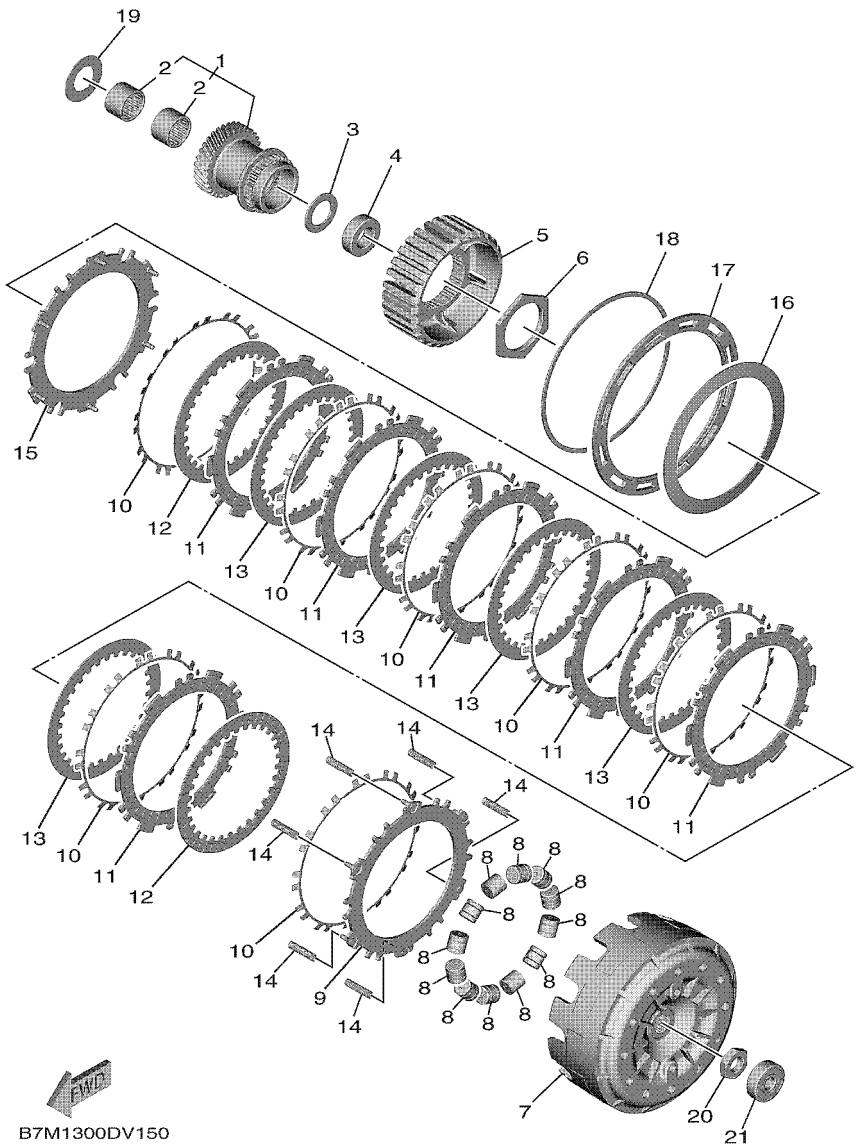

FIG. 15 CLUTCH

REF. NO.	PART NO.	DESCRIPTION	B7M1					REMARKS
1	B7M–16110–00	PRIMARY DRIVE GEAR ASSY	1					
2	93317–32493	.BEARING	2					
3	90201–244A9	WASHER, PLATE (2.05T)	1					
4	90387–20018	COLLAR	1					
5	B7M–16371–00	BOSS, CLUTCH	1					
6	90170–48003	NUT	1					
7	B7M–16511–00	HOUSING, CLUTCH	1					
8	5GJ–16540–00	ROLLER WEIGHT ASSY	12					
9	5GJ–16520–00	PLATE, THRUST WEIGHT	1					
10	5GJ–16533–00	SPRING, CLUTCH	7					
11	B7M–16321–00	PLATE, FRICTION	6					
12	B7M–16325–00	PLATE, CLUTCH 2	2					
13	B7M–16324–00	PLATE, CLUTCH 1	5					
14	90501–110A0	SPRING, COMPRESSION	6					
15	5GJ–16550–00	PRESSURE PLATE ASSY	1					
16	5GJ–16334–00	SPRING, CLUTCH 2	1					
17	5GJ–16537–00	PLATE, SPRING STOPPER	1					UR (HOLE 0)
	5GJ–16537–10	PLATE, SPRING STOPPER	1					UR (HOLE 1)
	5GJ–16537–20	PLATE, SPRING STOPPER	1					UR (HOLE 2)
	5GJ–16537–30	PLATE, SPRING STOPPER	1					UR (HOLE 3)
18	5GJ–16529–00	CLIP	1					
19	90201–24017	WASHER, PLATE	1					
20	90170–16326	NUT	1					
21	93306–30102	BEARING	1					

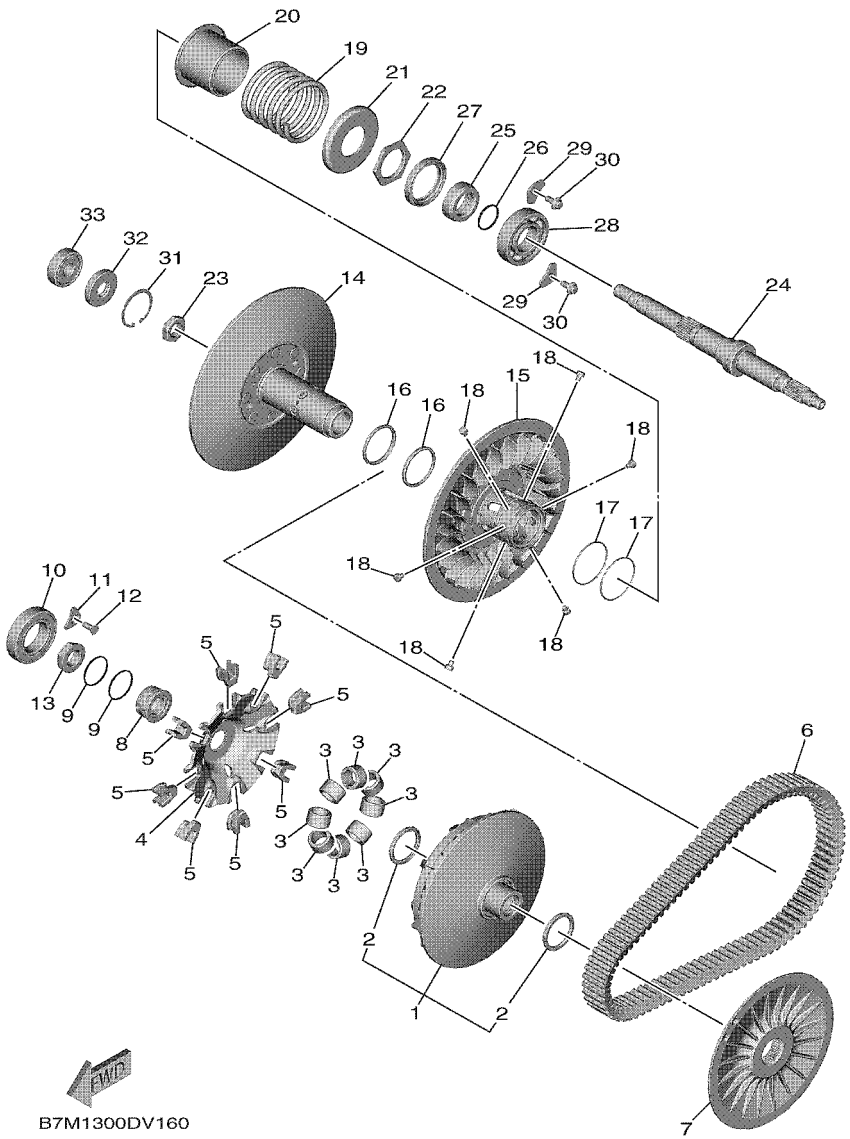

FIG. 16 CLUTCH 2

REF. NO.	PART NO.	DESCRIPTION	B7M1					REMARKS
1	B7M–17601–09	PRIMARY SHEAVE ASSY	1					
2	93101–35001	.OIL SEAL	2					
3	5VU–17632–10	WEIGHT	8					
4	BC3–17623–00	CAM	1					
5	59C–17653–00	SLIDER	8					
6	B7M–17641–00	V-BELT	1					
7	59C–17611–00	SHEAVE, PRIMARY FIXED	1					
8	59C–17649–01	SPACER	1					
9	93210–30611	O-RING	2					
10	93306–00713	BEARING	1					
11	4XM–15383–00	PLATE, BEARING COVER	1					
12	90151–06024	SCREW, COUNTERSUNK	1					
13	90179–20013	NUT	1					
14	59C–17660–00	SECONDARY FIXED SHEAVE COMP.	1					
15	59C–17670–00	SECONDARY SLIDING SHEAVE	1					
16	93104–41119	OIL SEAL	2					
17	93210–44545	O-RING	2					
18	4CW–17664–00	PIN, GUIDE	6					
19	90501–620A1	SPRING, COMPRESSION	1					
20	5GJ–17690–00	SPRING SEAT COMP.	1					
21	4WV–17644–00	SEAT,SPRING	1					
22	90170–36279	NUT	1					
23	90170–18221	NUT	1					
24	B7M–17681–00	SHAFT, SECONDARY	1					
25	90387–26001	COLLAR	1					
26	93210–26001	O-RING	1					
27	93102–42004	OIL SEAL	1					

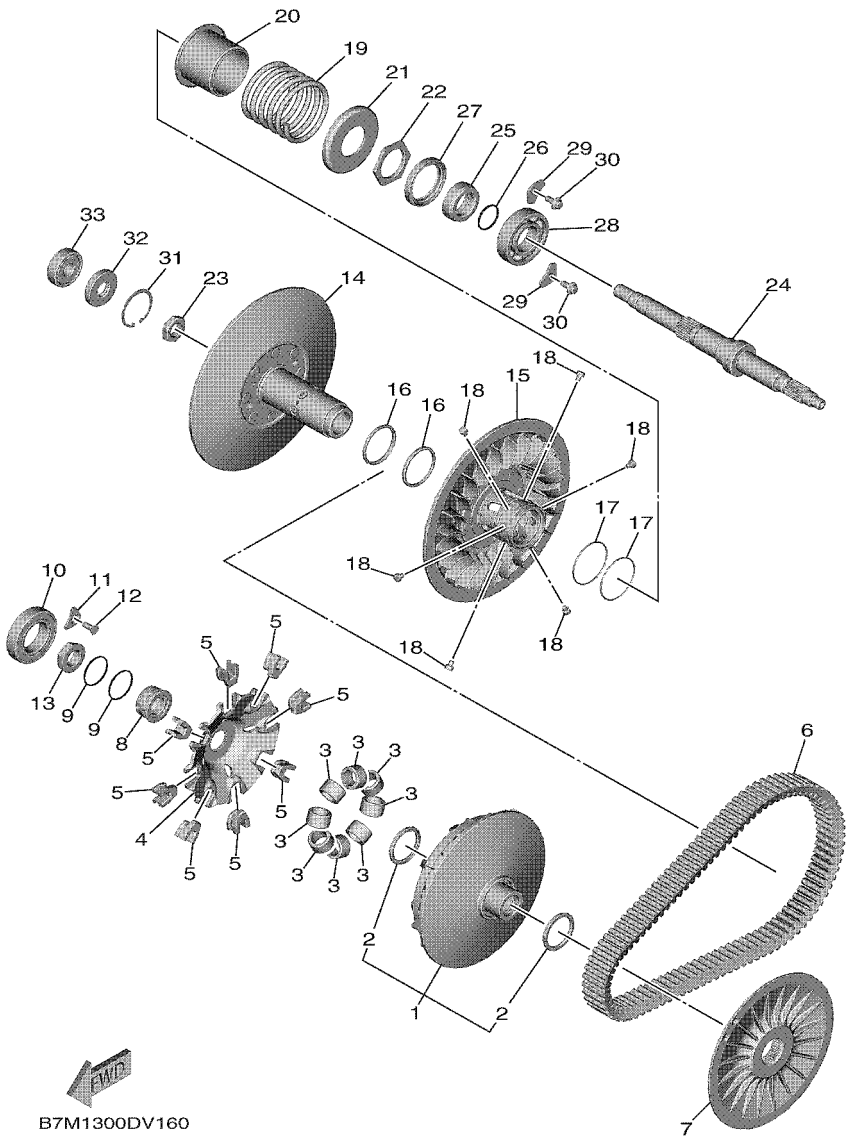

FIG. 16 CLUTCH 2

REF. NO.	PART NO.	DESCRIPTION	B7M1					REMARKS
28	93306–20651	BEARING	1					
29	5GJ–15383–00	PLATE, BEARING COVER	2					
30	90110–06036	BOLT, HEXAGON SOCKET HEAD	2					
31	99009–42500	CIRCLIP	1					
32	93102–15004	OIL SEAL	1					
33	93306–30217	BEARING	1					

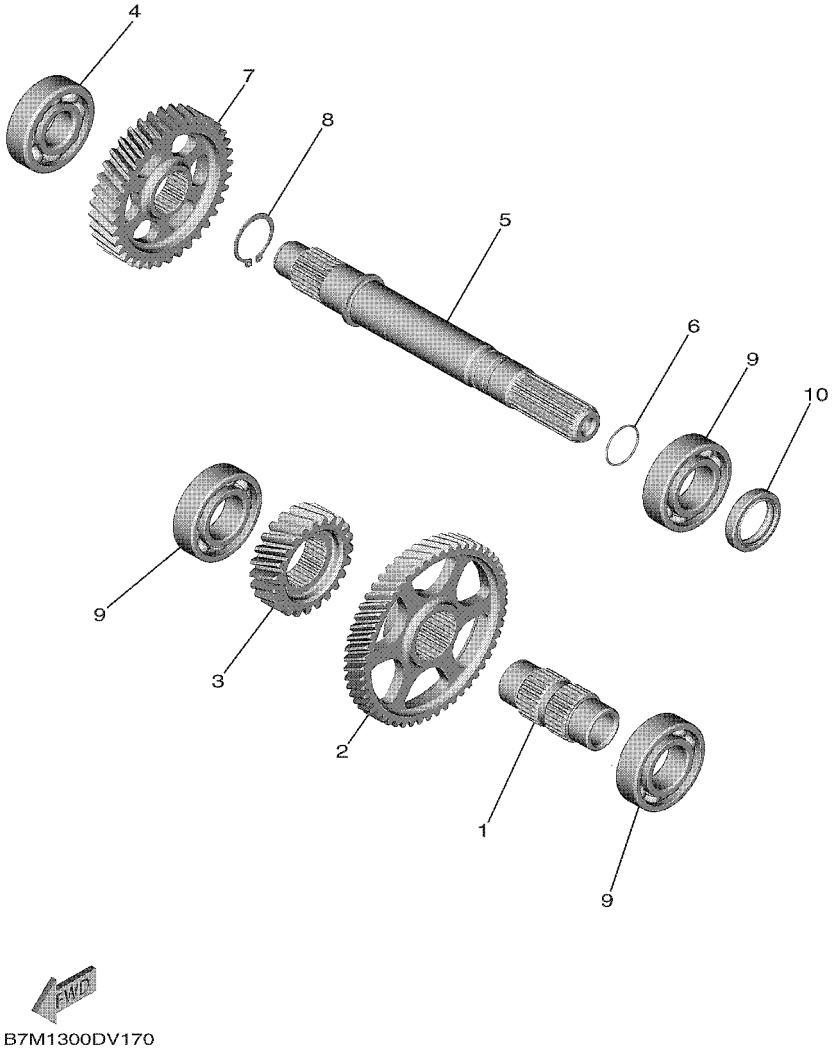

FIG. 17 TRANSMISSION

REF. NO.	PART NO.	DESCRIPTION	B7M1					REMARKS
1	59C–17411–10	AXLE, MAIN	1					
2	59C–16151–00	GEAR, PRIMARY DRIVEN (52T)	1					
3	B7M–17111–00	GEAR,1ST PINION	1					
4	93306–30427	BEARING	1					
5	B7M–17421–00	AXLE, DRIVE	1					
6	93210–21006	O-RING	1					
7	B7M–17211–00	GEAR, 1ST WHEEL (36T)	1					
8	99009–25400	CIRCLIP	1					
9	93306–205A8	BEARING	3					
10	93102–25064	OIL SEAL	1					

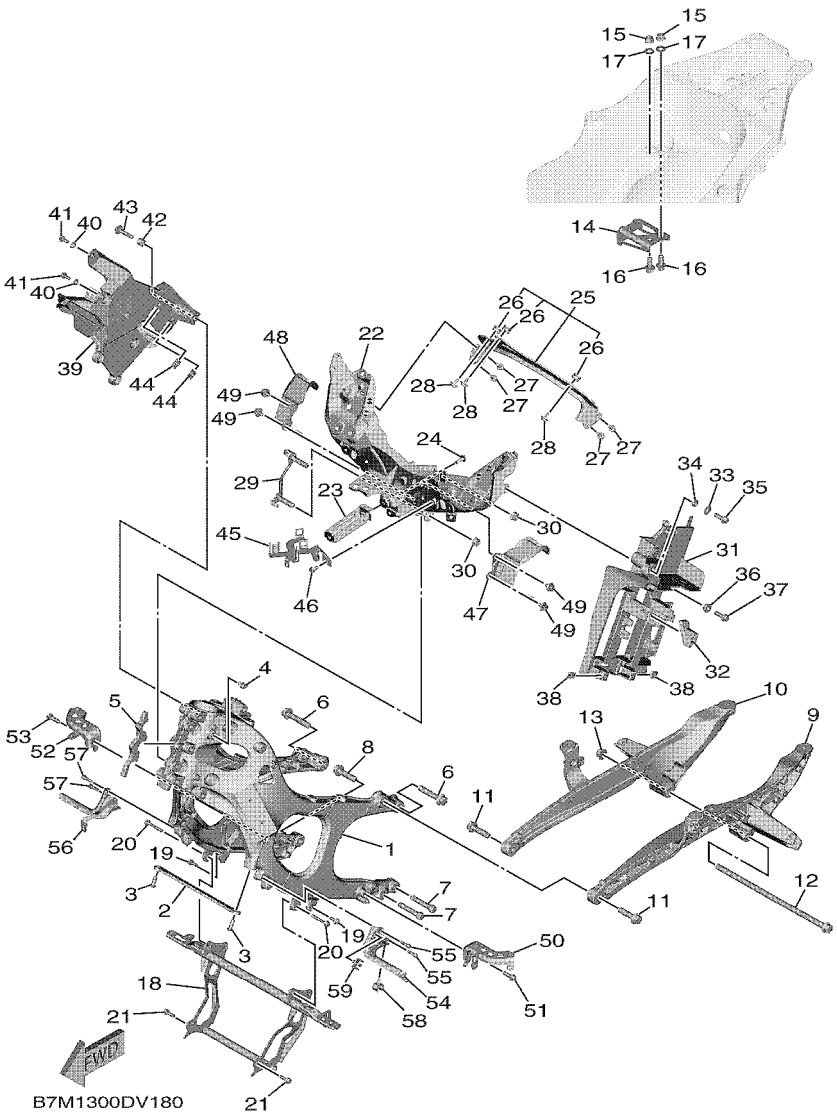

FIG. 18 FRAME

REF. NO.	PART NO.	DESCRIPTION	B7M1					REMARKS
1	B7M–21110–00	FRAME COMP.	1					
2	BC3–21236–00	REINFORCEMENT	1					
3	90149–08055	SCREW	2					
4	5VX–21279–10	PLUG, BLIND	1					
5	BC3–2113B–00	DAMPER	1					
6	BC3–21481–00	BOLT, ENGINE MOUNTING 1	2					
7	90110–10046	BOLT, HEXAGON SOCKET HEAD	2					
8	90105–12109	BOLT, FLANGE	1					
9	BC3–21195–00	SEAT, RAIL 1	1					
10	BC3–21185–00	SEAT, RAIL 2	1					
11	90105–12109	BOLT, FLANGE	2					
12	90105–12052	BOLT, FLANGE	1					
13	95602–12200	NUT, SELF-LOCKING	1					
14	BC3–21445–00	STAY, MUFFLER 1	1					
15	95602–10200	NUT, S/L FLANGE	2					
16	95D37–10025	BOLT, FLANGE DEEP RECESS	2					
17	90201–10078	WASHER, PLATE	2					
18	BC3–2142K–00	BRACKET, RADIATOR	1					
19	95812–06016	BOLT, FLANGE	2					
20	95812–06040	BOLT, FLANGE	2					
21	95D32–06020	BOLT, FLANGE DEEP RECESS	2					
22	BC3–28356–00	STAY 1	1					
23	BC3–84118–00	STAY, HEADLIGHT 1	1					
24	90110–06173	BOLT, HEXAGON SOCKET HEAD	1					
25	BC3–28320–00	LEG SHIELD STAY SET	1					
26	4XV–83513–00	.DAMPER	3					
27	95D32–06012	BOLT, FLANGE DEEP RECESS	4					

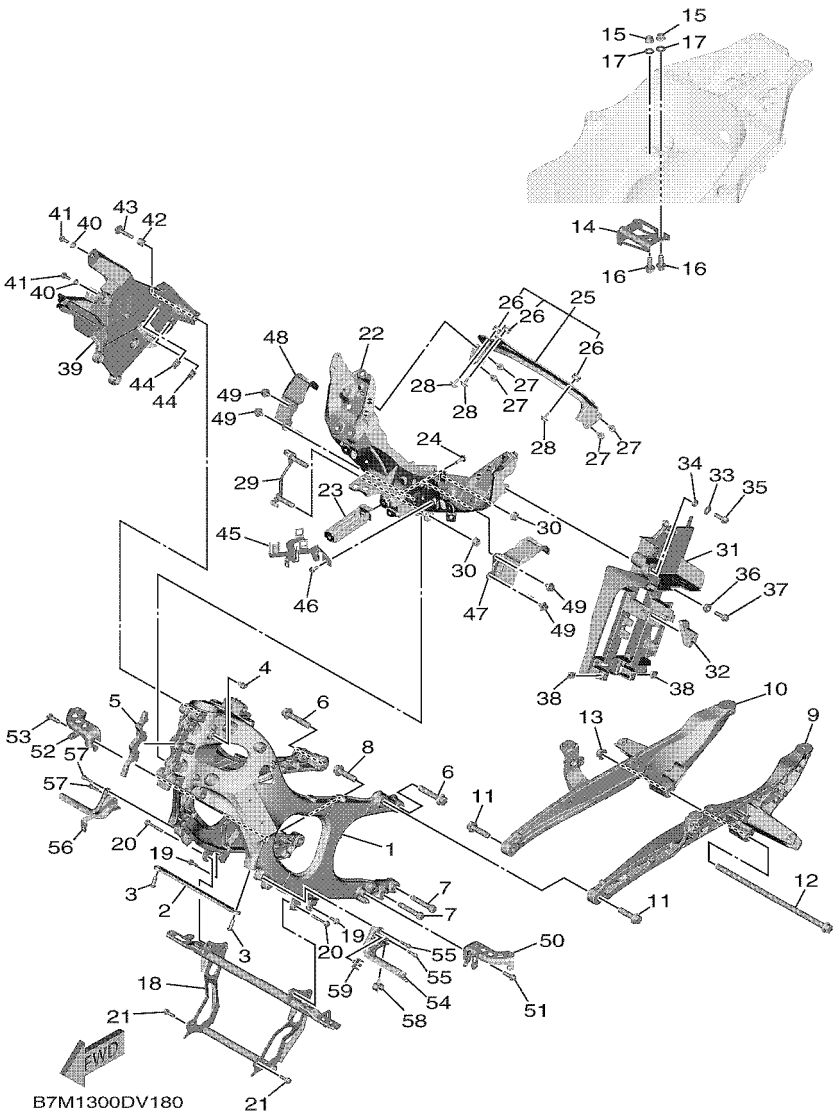

FIG. 18 FRAME

REF. NO.	PART NO.	DESCRIPTION	B7M1					REMARKS
28	90169–05006	TAPPING SCREW	3					
29	BC3–28336–00	PLATE	1					
30	95702–10500	NUT, FLANGE	2					
31	B7M–8212B–00	BOX, BATTERY 1	1					
32	B7M–2139X–00	DAMPER	1					
33	90201–087F0	WASHER, PLATE	1					
34	90387–085E1	COLLAR	1					
35	90105–08073	BOLT, FLANGE	1					
36	90387–10114	COLLAR	1					
37	90105–08129	BOLT, FLANGE	1					
38	90183–06069	NUT, SPRING	2					
39	BC3–8212C–00	BOX, BATTERY 2	1					
40	90387–06107	COLLAR	2					
41	95D02–06016	BOLT, FLANGE DEEP RECESS	2					
42	90387–10100	COLLAR	1					
43	90119–08112	BOLT, WITH WASHER	1					
44	90183–06069	NUT, SPRING	2					
45	BC3–2116M–00	BRACKET 10	1					
46	90111–06092	BOLT,HEX. SOCKET BUTTON	1					
47	BC3–2117F–00	COVER	1					
48	BC3–2117M–00	COVER 2	1					
49	90269–07076	RIVET	4					
50	BC3–2141A–00	BRACKET 1	1					
51	90105–08M35	BOLT, FLANGE	1					
52	BC3–2141E–00	BRACKET 2	1					
53	90105–08M35	BOLT, FLANGE	1					
54	BC3–2144H–00	BRACKET, FOOTREST 3	1					

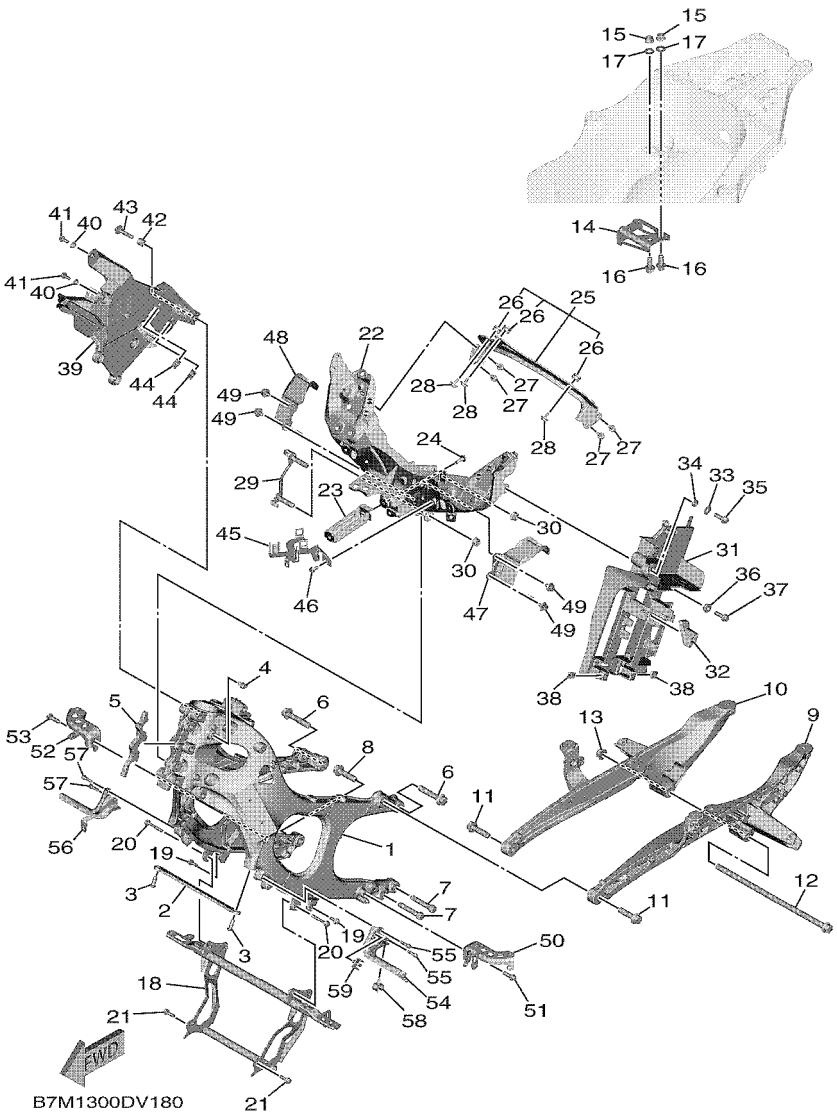

FIG. 18 FRAME

REF. NO.	PART NO.	DESCRIPTION	B7M1					REMARKS
55	90105–06127	BOLT, FLANGE	2					
56	BC3–2145H–00	BRACKET, FOOTREST 4	1					
57	90105–06127	BOLT, FLANGE	2					
58	90464–09130	CLAMP	1					
59	90464–08126	CLAMP	1					

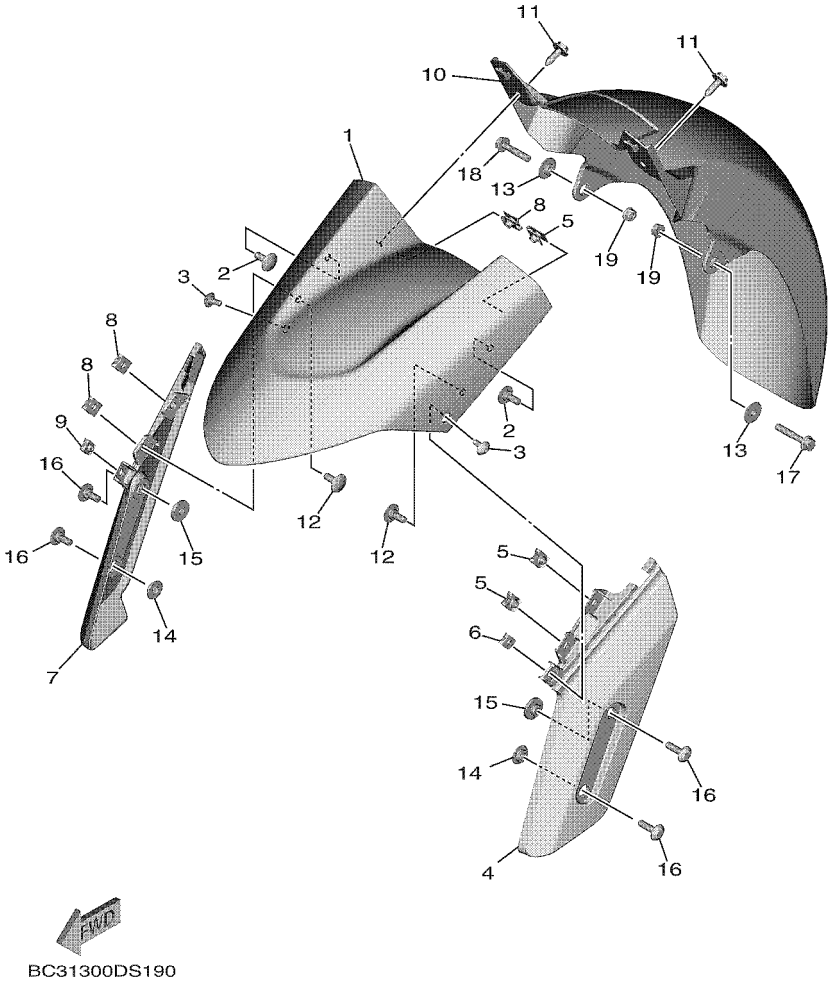

FIG. 19 FENDER

REF. NO.	PART NO.	DESCRIPTION	B7M1					REMARKS
1	2PW–21511–00–PC	FENDER, FRONT	1					UR FOR MDNMA
	2PW–21511–00–P9	FENDER, FRONT	1					UR FOR MDNM8
2	90149–06117	SCREW	2					
3	90111–05049	BOLT,HEX. SOCKET BUTTON	2					
4	2PW–21513–00	STAY, FENDER 1	1					
5	90183–060A6	NUT, SPRING	3					
6	90183–050A6	NUT, SPRING	1					
7	2PW–21514–00	STAY, FENDER 2	1					
8	90183–060A6	NUT, SPRING	3					
9	90183–050A6	NUT, SPRING	1					
10	2PW–21556–00	FENDER, FRONT 2	1					
11	90119–06156	BOLT, WITH WASHER	2					
12	90149–06117	SCREW	2					
13	90387–06153	COLLAR	2					
14	90387–08079	COLLAR	2					
15	90387–06325	COLLAR	2					
16	90111–06140	BOLT,HEX. SOCKET BUTTON	4					
17	95D32–06035	BOLT, FLANGE DEEP RECESS	1					
18	95D32–06030	BOLT, FLANGE DEEP RECESS	1					
19	95702–06500	NUT, FLANGE	2					

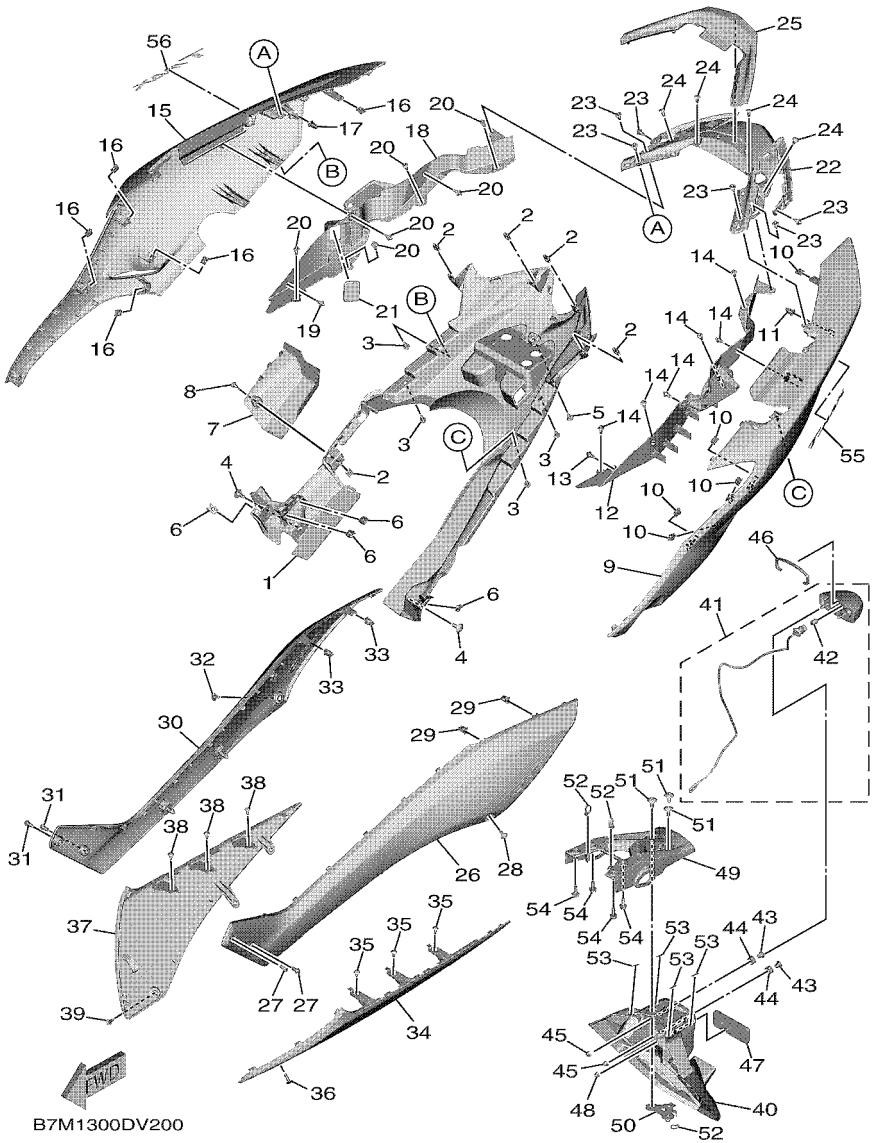

FIG. 20 SIDE COVER

REF. NO.	PART NO.	DESCRIPTION	B7M1					REMARKS
1	B7M–2171E–00	COVER, SIDE 5	1					
2	90183–05042	NUT, SPRING	5					
3	90269–06008	RIVET	4					
4	90111–06089	BOLT,HEX. SOCKET BUTTON	2					
5	97707–50012	SCREW, TRUSS HEAD TAPPING	1					
6	90183–060A6	NUT, SPRING	4					
7	BC3–2177B–00	LID, COVER	1					
8	90167–05079	SCREW, TAPPING	1					
9	B7M–21711–00–P2	COVER, SIDE 1	1					UR FOR MDNMA
	B7M–21711–00–P1	COVER, SIDE 1	1					UR FOR MDNM8
10	90183–05042	NUT, SPRING	5					
11	90464–07018	CLAMP	1					
12	B7M–2172G–00	PANEL 3	1					
13	90269–06019	RIVET	1					
14	90269–06008	RIVET	6					
15	B7M–21721–00–P2	COVER, SIDE 2	1					UR FOR MDNMA
	B7M–21721–00–P1	COVER, SIDE 2	1					UR FOR MDNM8
16	90183–05042	NUT, SPRING	5					
17	90464–07018	CLAMP	1					
18	B7M–2172H–00	PANEL 4	1					
19	90269–06019	RIVET	1					
20	90269–06008	RIVET	6					
21	90338–36004	PLUG	1					
22	B7M–2171A–00	COVER, TOP	1					
23	90269–06008	RIVET	6					
24	97702–50012	SCREW, TAPPING	4					
25	B7M–2175N–00	COVER, FLANGE	1					

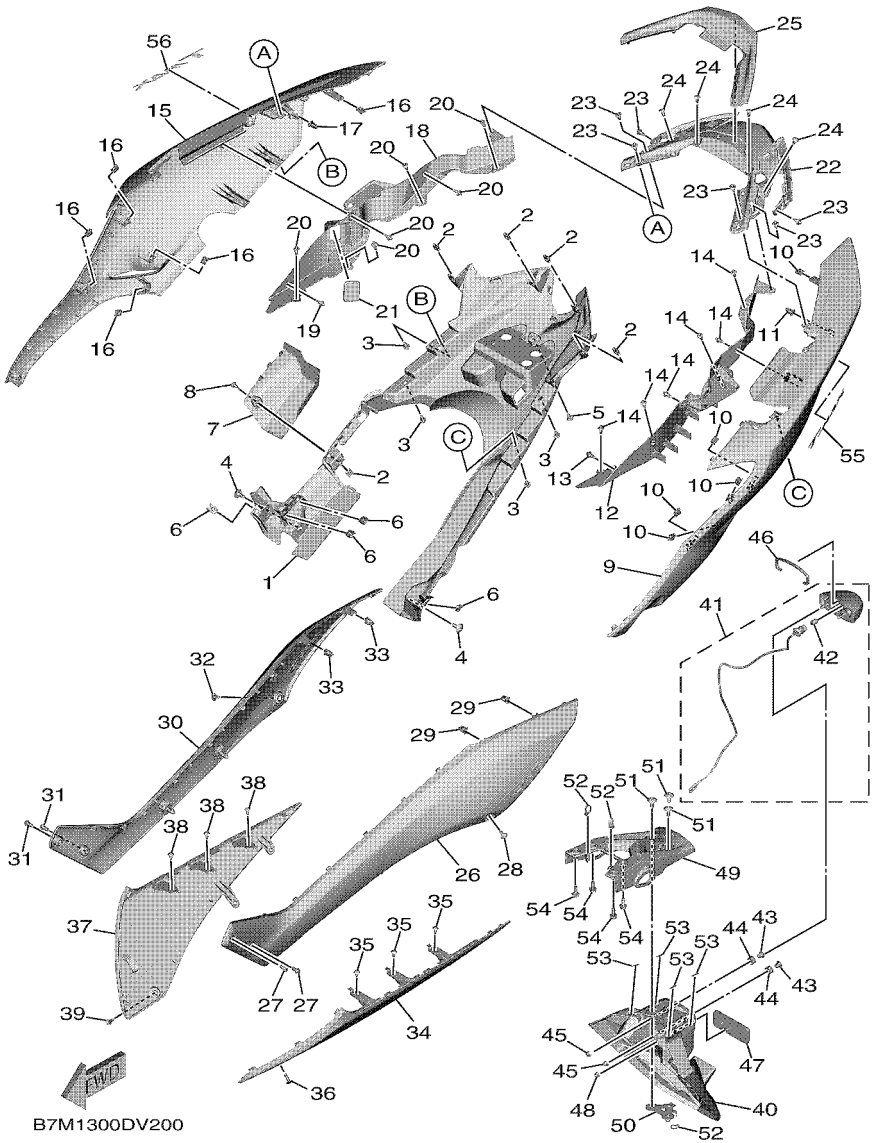

FIG. 20 SIDE COVER

REF. NO.	PART NO.	DESCRIPTION	B7M1					REMARKS
26	B7M–21731–00–P0	COVER, SIDE 3	1					UR MBL2 FOR MDNMA
	B7M–21731–00–P1	COVER, SIDE 3	1					UR SMX FOR MDNM8
27	92014–06012	BOLT, BUTTON HEAD	2					
28	90111–05045	BOLT,HEX. SOCKET BUTTON	1					
29	90464–07018	CLAMP	2					
30	B7M–21741–00–P0	COVER, SIDE 4	1					UR MBL2 FOR MDNMA
	B7M–21741–00–P1	COVER, SIDE 4	1					UR SMX FOR MDNM8
31	92014–06012	BOLT, BUTTON HEAD	2					
32	90111–05045	BOLT,HEX. SOCKET BUTTON	1					
33	90464–07018	CLAMP	2					
34	BC3–2171L–00–P6	MOLE, SIDE COVER 1	1					UR FOR MDNMA
	BC3–2171L–00–P4	MOLE, SIDE COVER 1	1					UR FOR MDNM8
35	97702–50012	SCREW, TAPPING	3					
36	90167–05076	SCREW, TAPPING	1					
37	BC3–2171M–00–P6	MOLE, SIDE COVER 2	1					UR FOR MDNMA
	BC3–2171M–00–P4	MOLE, SIDE COVER 2	1					UR FOR MDNM8
38	97702–50012	SCREW, TAPPING	3					
39	90167–05076	SCREW, TAPPING	1					
40	BC3–21629–00	GUARD, MUD	1					
41	BC3–84740–00	LICENCE LIGHT ASSY	1					
42	1TP–84347–00	.BULB (12V-5W)	1					
43	90387–05042	COLLAR	2					
44	90480–11009	GROMMET	2					
45	95602–05200	NUT, SELF-LOCKING	2					
46	BC3–21773–00	GROMMET	1					
47	3Y6–85130–02	REAR REFLECTOR ASSY	1					
48	95607–05200	NUT, S/L FLANGE	1					

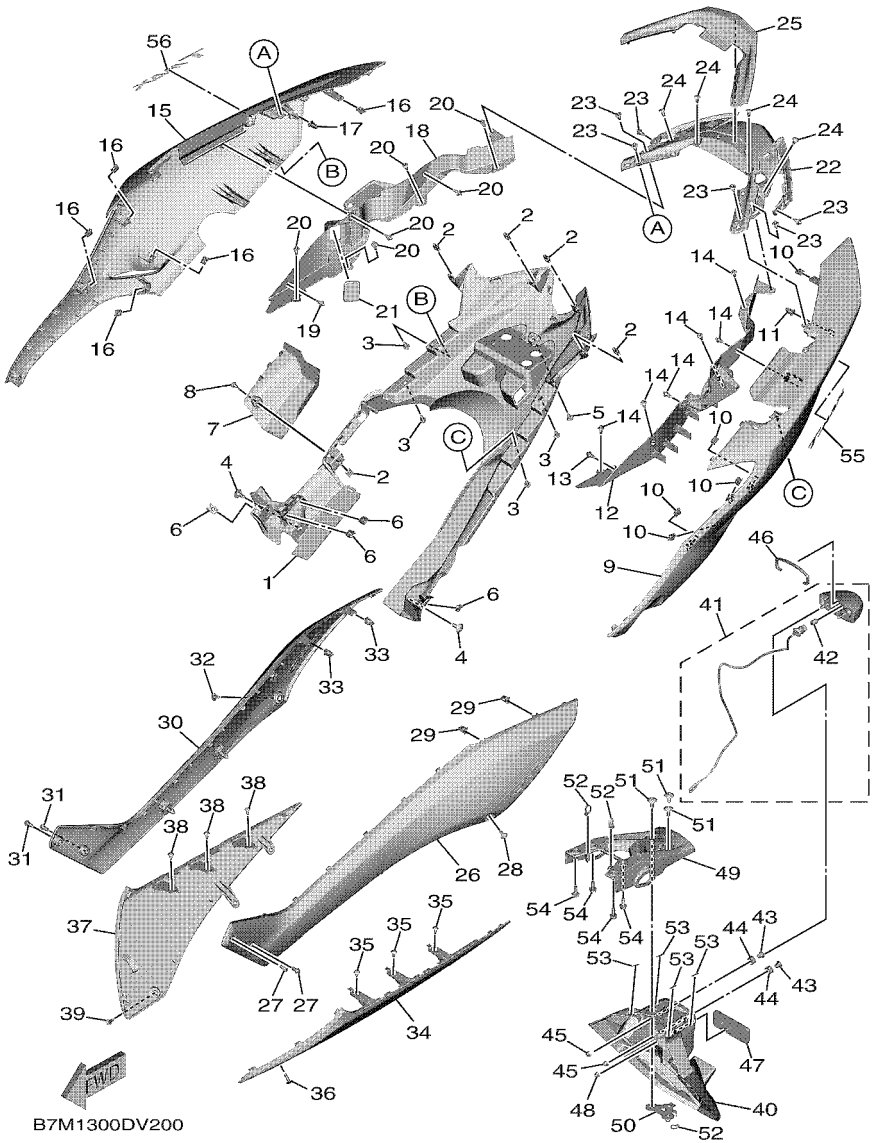

FIG. 20 SIDE COVER

REF. NO.	PART NO.	DESCRIPTION	B7M1					REMARKS
49	BC3–21671–00	REINF., REAR FENDER	1					
50	BC3–2161G–00	BRACKET 6	1					
51	90111–06089	BOLT,HEX. SOCKET BUTTON	3					
52	90465–10098	CLAMP	3					
53	BC3–21669–00	SEAL	4					
54	95D32–06016	BOLT, FLANGE DEEP RECESS	4					
55	5GJ–2173B–61	EMBLEM 3D	1					
56	5GJ–2173B–61	EMBLEM 3D	1					

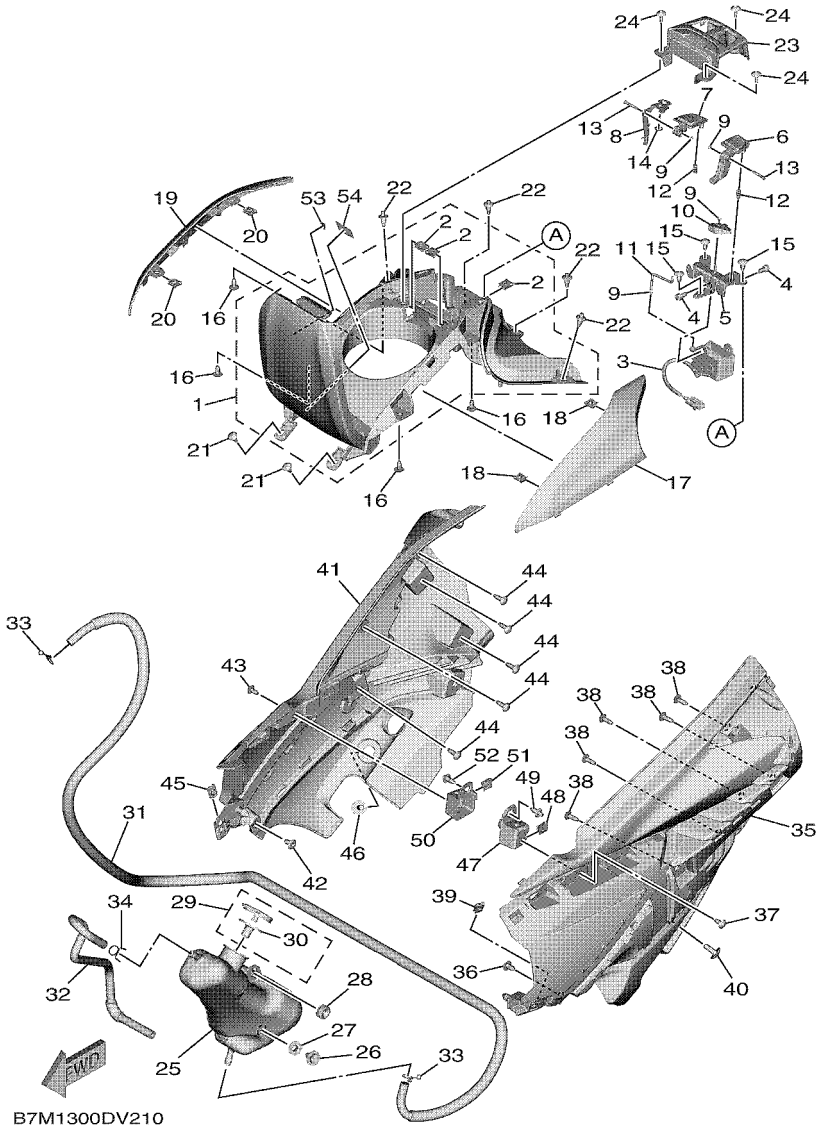

FIG. 21 SIDE COVER 2

REF. NO.	PART NO.	DESCRIPTION	B7M1					REMARKS
1	BC3–24765–00	LID, DOUBLE SEAT	1					
2	90183–05042	.NUT, SPRING	3					
3	BC3–86111–00	COIL, SOLENOID	1					
4	91312–05010	BOLT, HEXAGON SOCKET HEAD	2					
5	B7M–2172K–00	BRACKET 1	1					
6	B7M–2477F–00	LEVER, SEAT	1					
7	B7M–24776–00	LEVER, SEAT	1					
8	B7M–2172N–00	BRACKET 4	1					
9	93430–02001	CIRCLIP	4					
10	BC3–2178J–00	LOCK	1					
11	BC3–2178V–00	SHAFT, LOCK	1					
12	90501–05512	SPRING, COMPRESSION	2					
13	B7M–24624–00	PIN 2	2					
14	90183–05M02	NUT, SPRING	1					
15	90160–05015	SCREW, ROUND TAPPING	3					
16	97702–50012	SCREW, TAPPING	4					
17	BC3–24129–A0	COVER, SIDE 1	1					
18	90183–05042	NUT, SPRING	2					
19	BC3–24139–A0	COVER, SIDE 2	1					
20	90183–05042	NUT, SPRING	2					
21	97702–50012	SCREW, TAPPING	2					
22	90269–06008	RIVET	4					
23	BC3–24796–00	COVER	1					
24	90167–05079	SCREW, TAPPING	3					
25	BC3–21871–00	TANK, RECOVERY	1					
26	90119–06230	BOLT, WITH WASHER	1					
27	90387–06681	COLLAR	1					

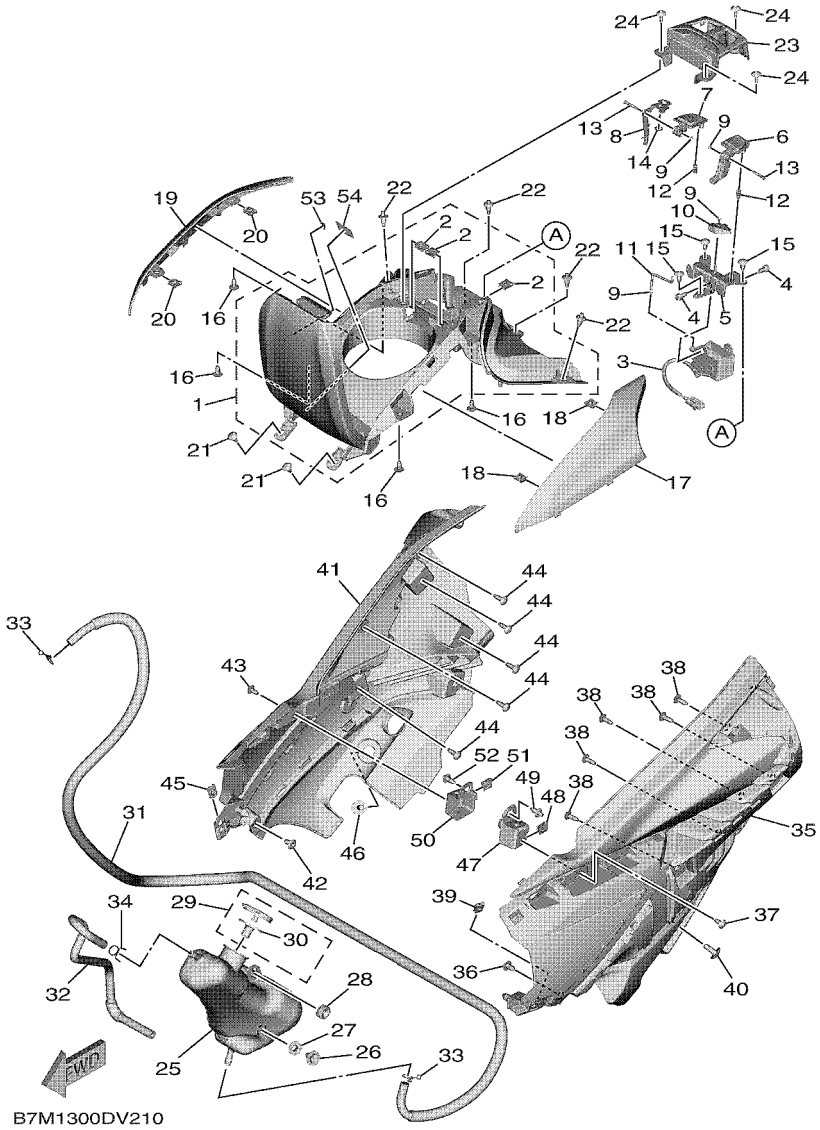

FIG. 21 SIDE COVER 2

REF. NO.	PART NO.	DESCRIPTION	B7M1					REMARKS
28	90480–10334	GROMMET	1					
29	1AA–21815–00	CAP	1					
30	1AA–21874–00	.GASKET	1					
31	B7M–21816–00	PIPE 1	1					
32	BC3–21817–00	PIPE 2	1					
33	90467–090A2	CLIP	2					
34	90467–10008	CLIP	1					
35	B7M–2171N–00	MOLE, SIDE COVER 3	1					
36	90269–06019	RIVET	1					
37	97702–50012	SCREW, TAPPING	1					
38	97702–50016	SCREW,TAPPING	5					
39	90183–05076	NUT, SPRING	1					
40	90110–06200	BOLT, HEXAGON SOCKET HEAD	1					
41	B7M–2171R–00	MOLE, SIDE COVER 4	1					
42	90269–06019	RIVET	1					
43	97702–50012	SCREW, TAPPING	1					
44	97702–50016	SCREW,TAPPING	5					
45	90183–05076	NUT, SPRING	1					
46	90110–06200	BOLT, HEXAGON SOCKET HEAD	1					
47	B7M–2175T–00	BRACKET 1	1					
48	90183–05042	NUT, SPRING	1					
49	90269–06008	RIVET	1					
50	B7M–2175U–00	BRACKET 2	1					
51	90183–05042	NUT, SPRING	1					
52	90269–06008	RIVET	1					
53	B88–2817K–20	LABEL, FUEL	1					
54	5PW–2415E–01	LABEL, CAUTION	1					

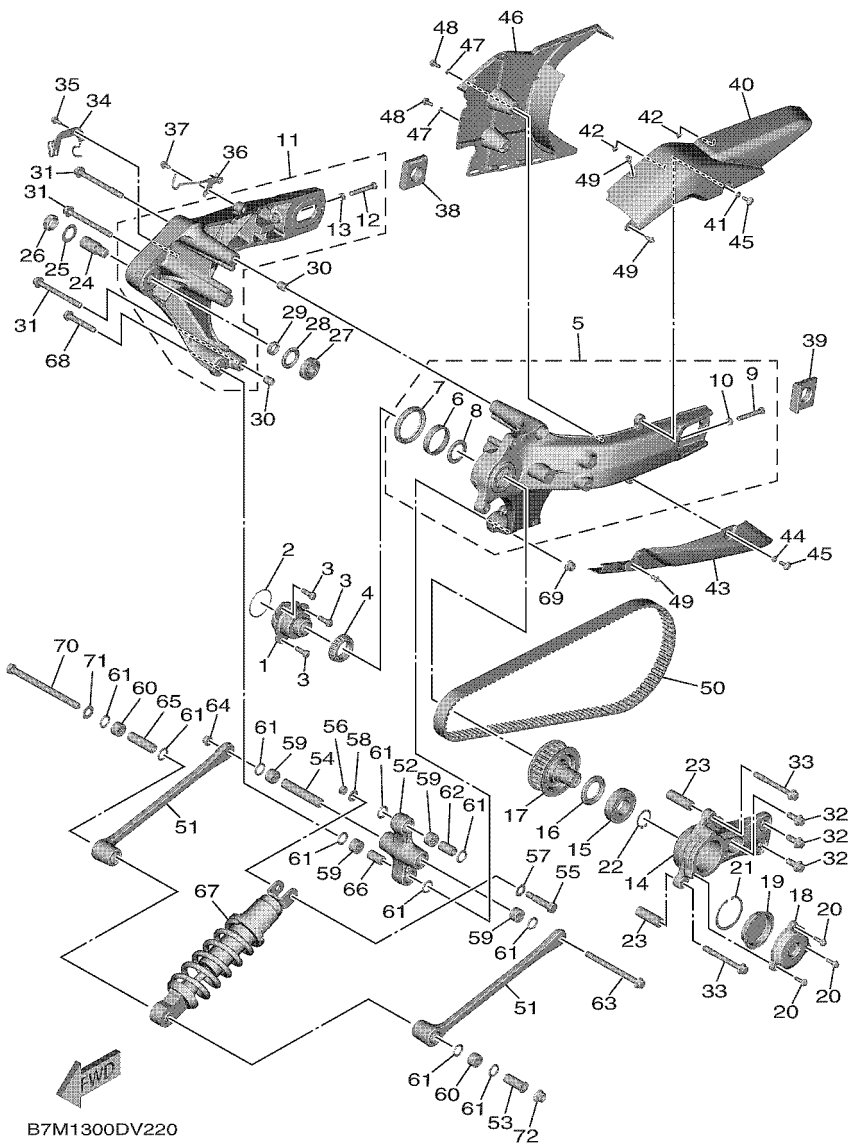

FIG. 22 REAR ARM & SUSPENSION

REF. NO.	PART NO.	DESCRIPTION	B7M1					REMARKS
1	15B–17524–00	HOLDER	1					
2	93210–50553	O-RING	1					
3	91312–08020	BOLT, HEXAGON SOCKET HEAD	3					
4	93332–00086	BEARING	1					
5	BC3–2210M–00	REAR ARM ASSY 1	1					
6	5GJ–17554–00	.RETAINER, BEARING	1					
7	93102–55004	.OIL SEAL	1					
8	93102–30284	.OIL SEAL	1					
9	90101–08013	.BOLT	1					
10	95302–08600	.NUT, HEXAGON	1					
11	BC3–2210N–01	REAR ARM ASSY 2	1					
12	90101–08013	.BOLT	1					
13	95302–08600	.NUT, HEXAGON	1					
14	BC3–22465–00	HOLDER	1					
15	93306–20662	BEARING	1					
16	93102–35023	OIL SEAL	1					
17	B7M–17651–00	PULLEY, BELT	1					
18	59C–2219X–00	COVER	1					
19	59C–2214F–00	DAMPER 1	1					
20	90110–06163	BOLT, HEXAGON SOCKET HEAD	3					
21	99009–62500	CIRCLIP	1					
22	99009–30400	CIRCLIP	1					
23	59C–46153–00	COLLAR, GUIDE	2					
24	15B–22141–00	SHAFT, PIVOT	1					
25	90201–22018	WASHER, PLATE	1					
26	1J7–22143–00	NUT	1					
27	93332–00010	BEARING	1					

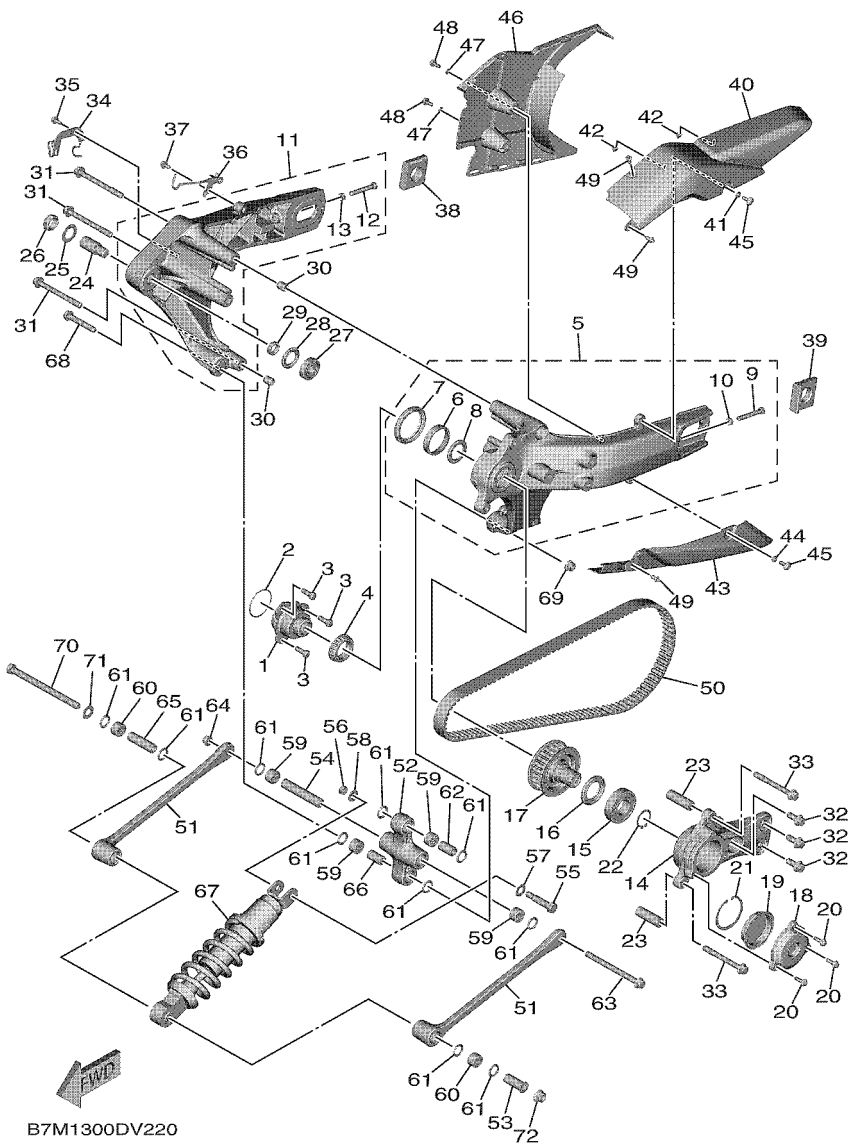

FIG. 22 REAR ARM & SUSPENSION

REF. NO.	PART NO.	DESCRIPTION	B7M1					REMARKS
28	93102–25017	OIL SEAL	1					
29	90387–17011	COLLAR	1					
30	99530–14016	PIN, DOWEL	2					
31	95D32–10100	BOLT, FLANGE DEEP RECESS	3					
32	95D32–10025	BOLT, FLANGE DEEP RECESS	3					
33	95D32–10090	BOLT, FLANGE DEEP RECESS	2					
34	BC3–21682–00	STAY, PLATE	1					
35	95D32–06012	BOLT, FLANGE DEEP RECESS	1					
36	BC3–2587A–00	HOLDER, BRAKE HOSE 4	1					
37	90105–06181	BOLT, FLANGE	1					
38	5VY–25388–00	PULLER, CHAIN 1	1					
39	5VY–25389–01	PULLER, CHAIN 2	1					
40	BC3–22311–00	CASE, CHAIN	1					
41	90387–06372	COLLAR	1					
42	90468–040A0	CLIP	2					
43	BC3–22312–00	CASE, CHAIN 2	1					
44	90387–06372	COLLAR	1					
45	90111–06116	BOLT,HEX. SOCKET BUTTON	2					
46	BC3–22381–00	COVER 1	1					
47	90387–06372	COLLAR	2					
48	95D32–06014	BOLT, FLANGE DEEP RECESS	2					
49	90269–06001	RIVET	3					
50	BC3–46241–01	BELT	1					
51	BC3–2217M–00	ARM 1	2					
52	BC3–2217A–00	ARM, RELAY	1					
53	BC3–2248B–00	COLLAR, ROD 1	1					
54	BC3–2248C–00	COLLAR, ROD 2	1					

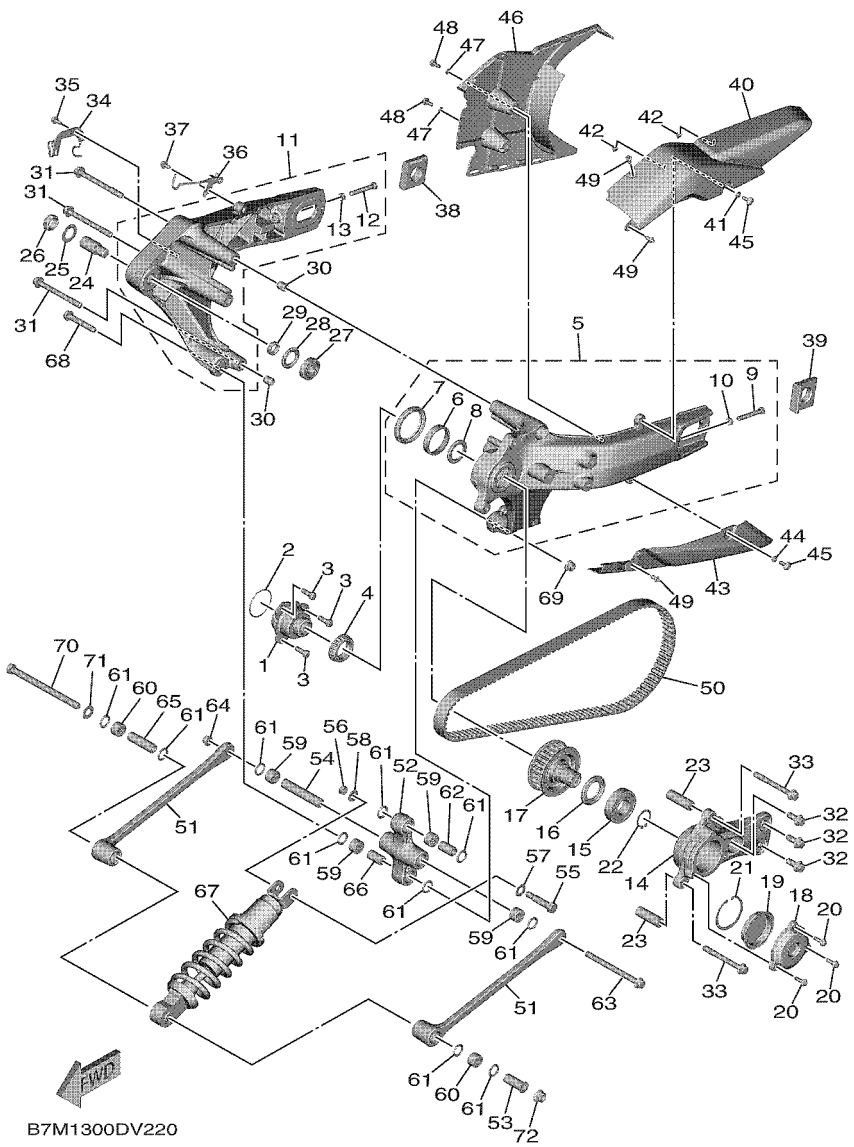

FIG. 22 REAR ARM & SUSPENSION

REF. NO.	PART NO.	DESCRIPTION	B7M1					REMARKS
55	90109–10027	BOLT	1					
56	95612–10100	NUT, U	1					
57	90201–13015	WASHER, PLATE	1					
58	90201–10035	WASHER, PLATE	1					
59	93315–31758	BEARING	4					
60	93315–41774	BEARING	2					
61	93109–17071	OIL SEAL	10					
62	90387–127W0	COLLAR	1					
63	90105–10220	BOLT, FLANGE	1					
64	95602–10200	NUT, S/L FLANGE	1					
65	BC3–2248B–10	COLLAR, ROD 1	1					
66	BC3–22882–00	COLLAR, DISTANCE 1	1					
67	B7M–22210–00	SHOCK ABSORBER ASSY, REAR	1					
68	90105–10318	BOLT, FLANGE	1					
69	95602–10200	NUT, S/L FLANGE	1					
70	90101–12060	BOLT	1					
71	90201–12034	WASHER, PLATE	1					
72	95602–12200	NUT, SELF-LOCKING	1					

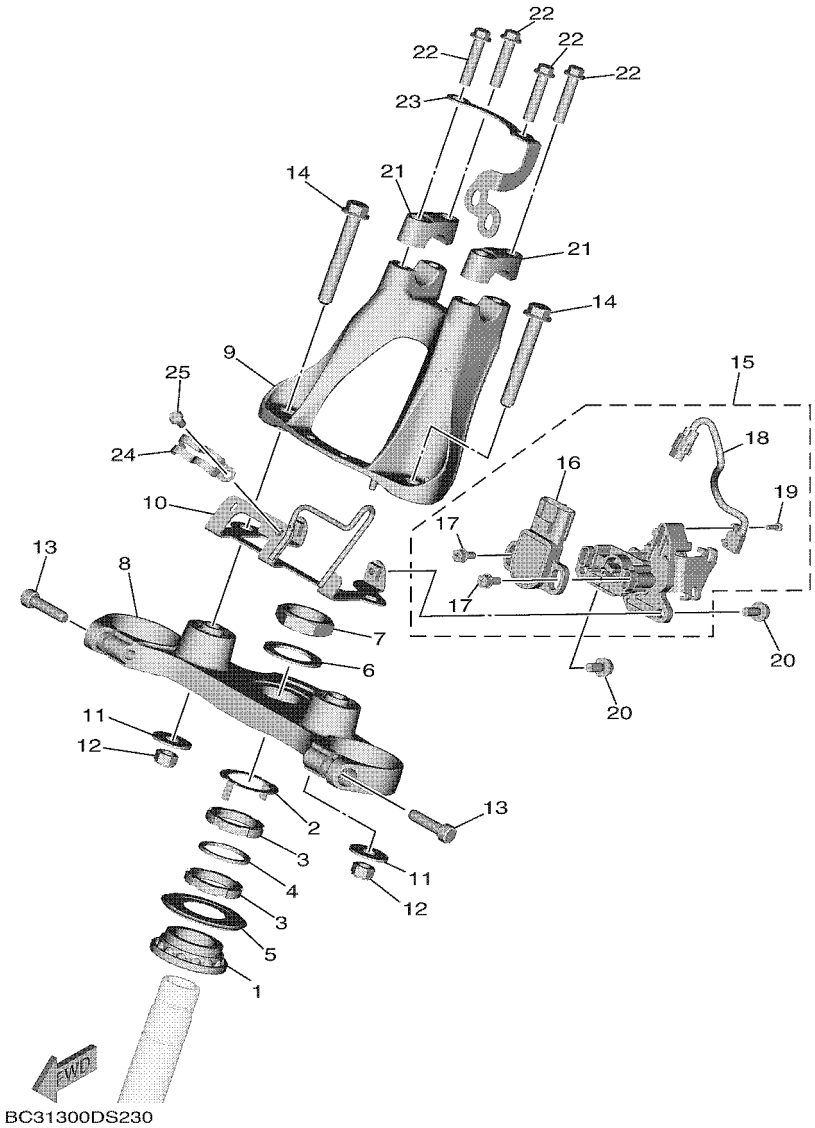

FIG. 23 STEERING

REF. NO.	PART NO.	DESCRIPTION	B7M1					REMARKS
1	93399–99932	BEARING	1					
2	4XV–23418–00	WASHER, SPECIAL	1					
3	90179–30006	NUT	2					
4	90202–30235	WASHER, PLATE	1					
5	4XV–23415–01	COVER, BALL RACE 1	1					
6	90201–28017	WASHER, PLATE	1					
7	90170–28419	NUT	1					
8	BC3–W2341–00	CROWN HANDLE	1					
9	59C–23442–01	HOLDER, HANDLE LOWER	1					
10	BC3–2334H–00	BRACKET 2	1					
11	90201–10043	WASHER, PLATE	2					
12	95602–10100	NUT, U	2					
13	91312–08030	BOLT, HEXAGON SOCKET HEAD	2					
14	90105–10211	BOLT, FLANGE	2					
15	BC3–26250–10	THROTTLE LEVER ASSY	1					
16	1MC–85884–00	.ACCELERATOR SENSOR ASSY	1					
17	5FL–14216–00	.SCREW	2					
18	1MC–81860–00	.SWITCH ASSY	1					
19	1MC–14216–00	.SCREW	1					
20	95D32–06014	BOLT, FLANGE DEEP RECESS	2					
21	2PW–23441–00	HOLDER, HANDLE UPPER	2					
22	95022–08035	BOLT, FLANGE	4					
23	BC3–2334G–00	BRACKET 1	1					
24	BC3–23857–00	HOLDER	1					
25	92012–06010	BOLT, BUTTON HEAD	1					

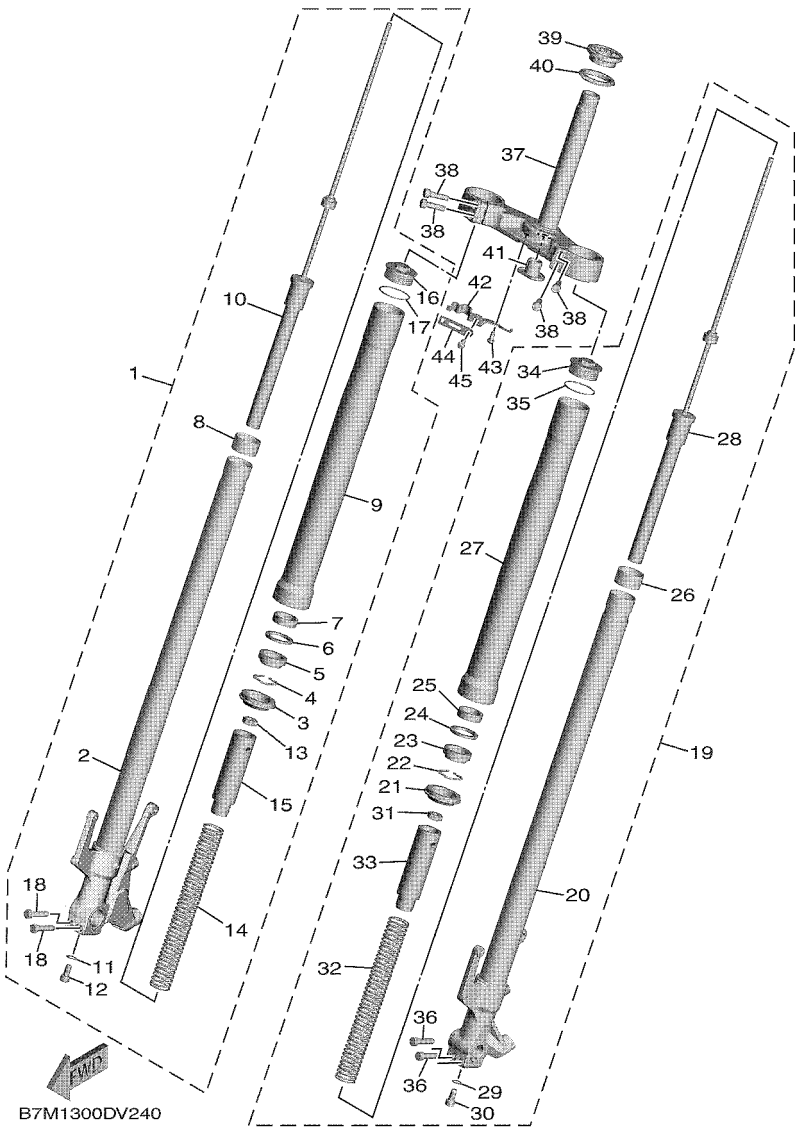

FIG. 24 FRONT FORK

REF. NO.	PART NO.	DESCRIPTION	B7M1					REMARKS
1	B7M–23103–00	FRONT FORK ASSY (R.H)	1					
2	BC3–23110–00	.INNER TUBE COMP.1	1					
3	4EB–23144–00	.SEAL, DUST	1					
4	26H–23156–00	.RING, SNAP	1					
5	4EB–23145–01	.OIL SEAL	1					
6	36Y–23146–10	.WASHER, OIL SEAL	1					
7	1RC–23125–00	.METAL, SLIDE 1	1					
8	4FM–23171–40	.METAL, SLIDE	1					
9	BC3–23126–00	.TUBE, OUTER (L.H)	1					
10	B7M–23170–00	.CYLINDER COMP., FRONT FORK	1					
11	509–23158–L0	.GASKET	1					(KYB)
12	278–23181–50	.BOLT, HEXAGON SOCKET HEAD	1					
13	3LC–23357–00	.NUT	1					
14	B7M–23141–00	.SPRING, FRONT FORK	1					
15	5VY–23118–00	.SPACER	1					
16	2PW–23111–00	.BOLT, CAP	1					
17	39P–23147–00	.O-RING	1					
18	91314–08040	.BOLT, HEXAGON SOCKET HEAD	2					
19	B7M–23102–00	FRONT FORK ASSY (L.H)	1					
20	BC3–23120–00	.INNER TUBE COMP.2	1					
21	4EB–23144–00	.SEAL, DUST	1					
22	26H–23156–00	.RING, SNAP	1					
23	4EB–23145–01	.OIL SEAL	1					
24	36Y–23146–10	.WASHER, OIL SEAL	1					
25	1RC–23125–00	.METAL, SLIDE 1	1					
26	4FM–23171–40	.METAL, SLIDE	1					
27	BC3–23126–00	.TUBE, OUTER (L.H)	1					

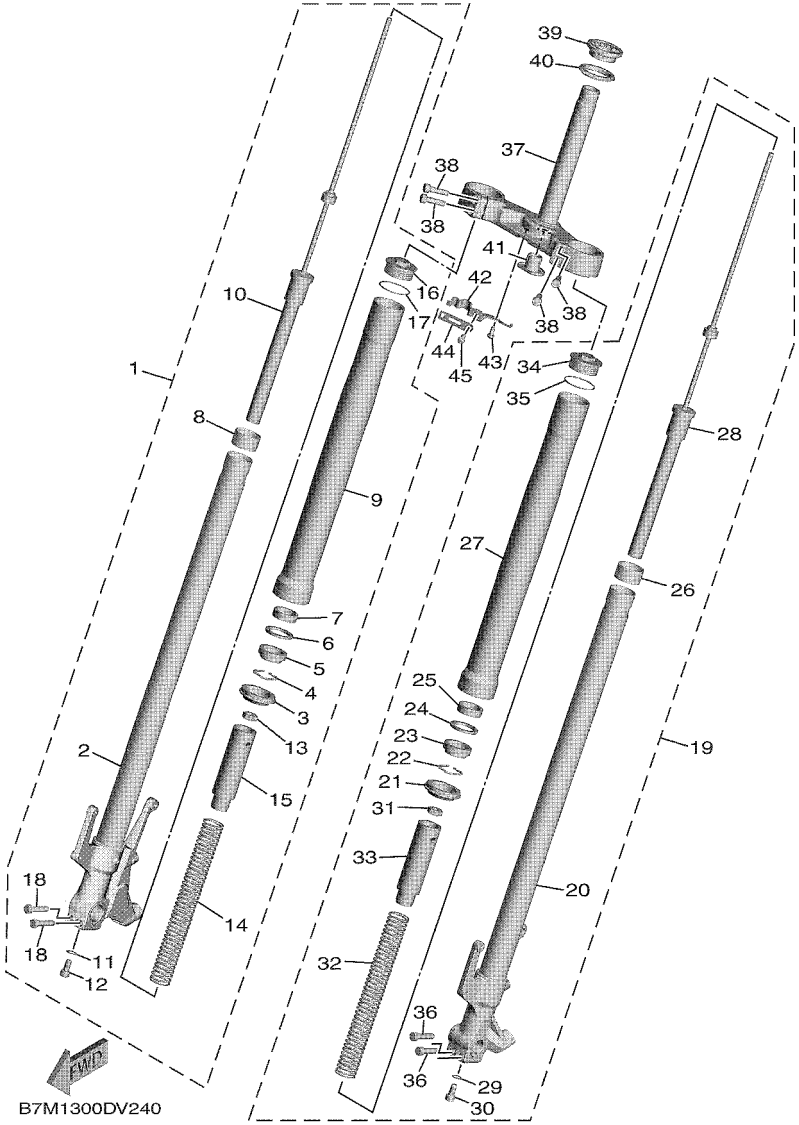

FIG. 24 FRONT FORK

REF. NO.	PART NO.	DESCRIPTION	B7M1					REMARKS
28	B7M–23170–10	.CYLINDER COMP., FRONT FORK	1					
29	509–23158–L0	.GASKET	1					(KYB)
30	278–23181–50	.BOLT, HEXAGON SOCKET HEAD	1					
31	3LC–23357–00	.NUT	1					
32	B7M–23141–00	.SPRING, FRONT FORK	1					
33	5VY–23118–00	.SPACER	1					
34	2PW–23111–00	.BOLT, CAP	1					
35	39P–23147–00	.O-RING	1					
36	91314–08040	.BOLT, HEXAGON SOCKET HEAD	2					
37	BC3–23340–00	UNDER BRACKET COMP.	1					
38	91312–08030	BOLT, HEXAGON SOCKET HEAD	4					
39	93399–99957	BEARING	1					
40	3FV–23462–00	SEAL, STEERING	1					
41	5PB–23123–00	COVER, UNDER 1	1					
42	BC3–2317E–00	STAY 1	1					
43	90149–06233	SCREW	1					
44	BC3–2317F–00	STAY 2	1					
45	92012–06012	BOLT, BUTTON HEAD	1					

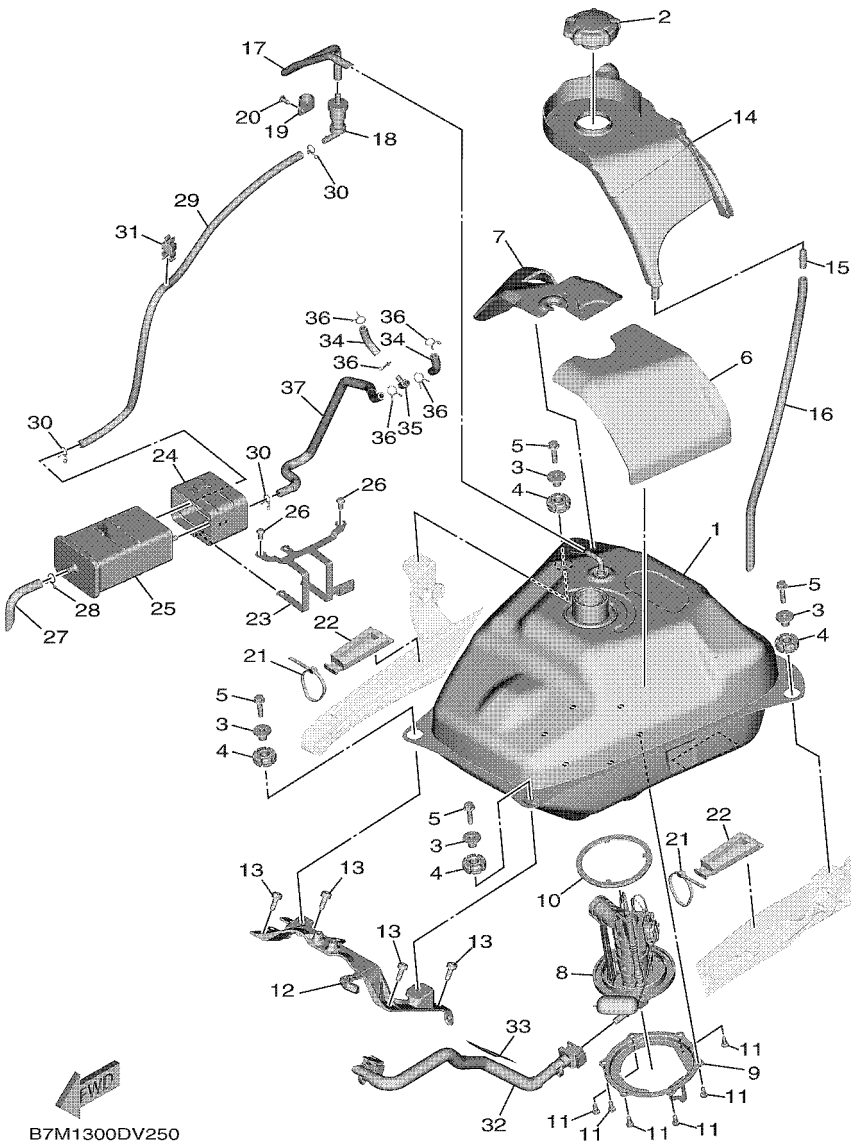

FIG. 25 FUEL TANK

REF. NO.	PART NO.	DESCRIPTION	B7M1					REMARKS
1	BC3–24110–00	FUEL TANK COMP.	1					
2	BC3–24610–01	CAP ASSY	1					
3	90387–062U9	COLLAR	4					
4	BC3–24339–00	GROMMET	4					
5	95D32–06025	BOLT, FLANGE DEEP RECESS	4					
6	BC3–24182–00	DAMPER, LOCATING 2	1					
7	BC3–24185–00	DAMPER, LOCATING 5	1					
8	BC3–13907–02	FUEL PUMP COMP.	1					
9	BC3–24491–00	BRACKET, FUEL PUMP	1					
10	1S4–24486–00	O-RING	1					
11	91312–05010	BOLT, HEXAGON SOCKET HEAD	6					
12	B7M–21345–00	BRACKET, TANK FITTING	1					
13	90110–06043	BOLT, HEXAGON SOCKET HEAD	4					
14	B7M–2414A–00	COVER, FILLER	1					
15	4JP–21753–00	BOSS, CONNECTOR	1					
16	BC3–24318–00	PIPE, OVERFLOW	1					
17	BC3–24313–00	PIPE 3	1					
18	5RB–24180–00	ROLL OVER VALVE ASSY	1					
19	90464–15014	CLAMP	1					
20	90269–05001	RIVET	1					
21	1UA–82591–00	BAND	2					
22	BC3–24184–00	DAMPER, LOCATING 4	2					
23	BC3–2419F–00	BRACKET, CANISTOR	1					
24	BC3–24183–00	DAMPER, LOCATING 3	1					
25	BC3–24170–00	CANISTER ASSY	1					
26	92012–06010	BOLT, BUTTON HEAD	2					
27	5EL–24316–10	PIPE 6	1					

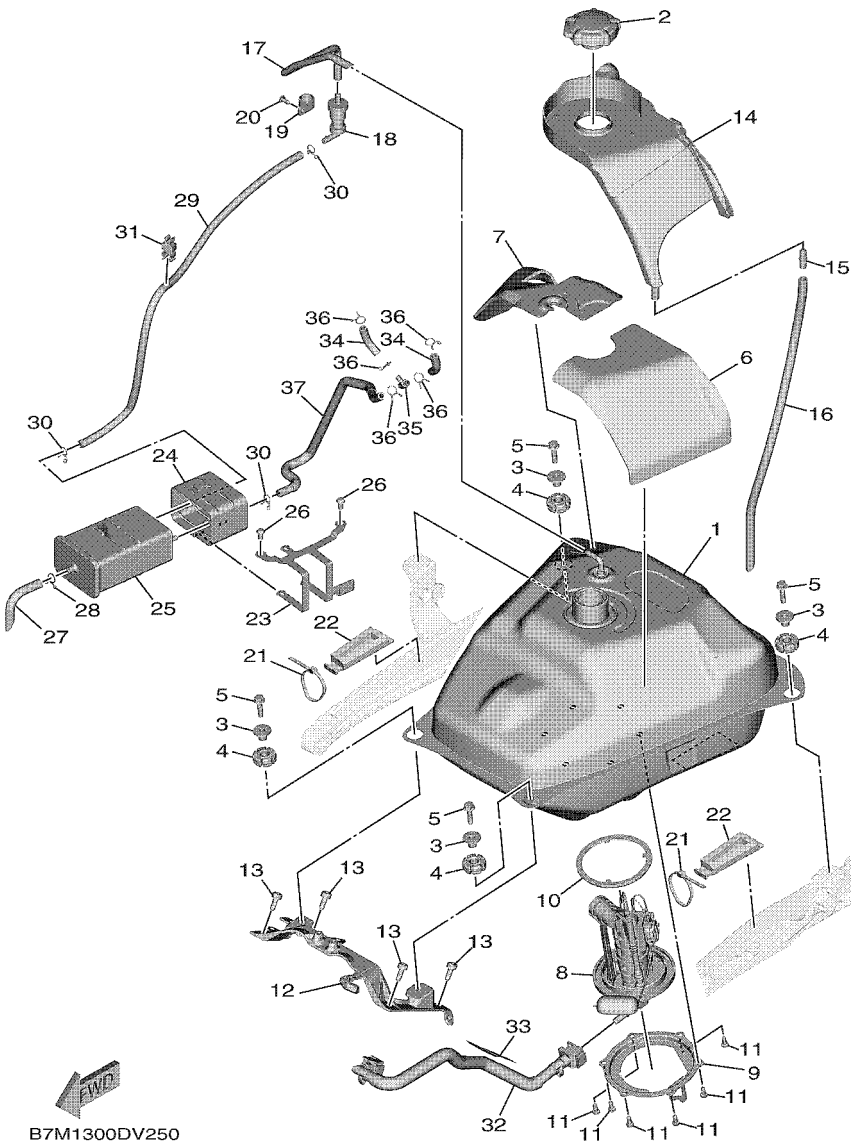

FIG. 25 FUEL TANK

REF. NO.	PART NO.	DESCRIPTION	B7M1					REMARKS
28	90467–110A3	CLIP	1					
29	B7M–24315–00	PIPE 5	1					
30	90467–090A2	CLIP	3					
31	90464–10M52	CLAMP	1					
32	B7M–13971–01	PIPE, FUEL 1	1					
33	B7M–2476U–00	PROTECTOR 1	1					
34	B7M–14465–00	PIPE	2					
35	90413–06031	WAY 3	1					
36	90467–09006	CLIP	5					
37	B7M–13758–00	PIPE, JOINT	1					

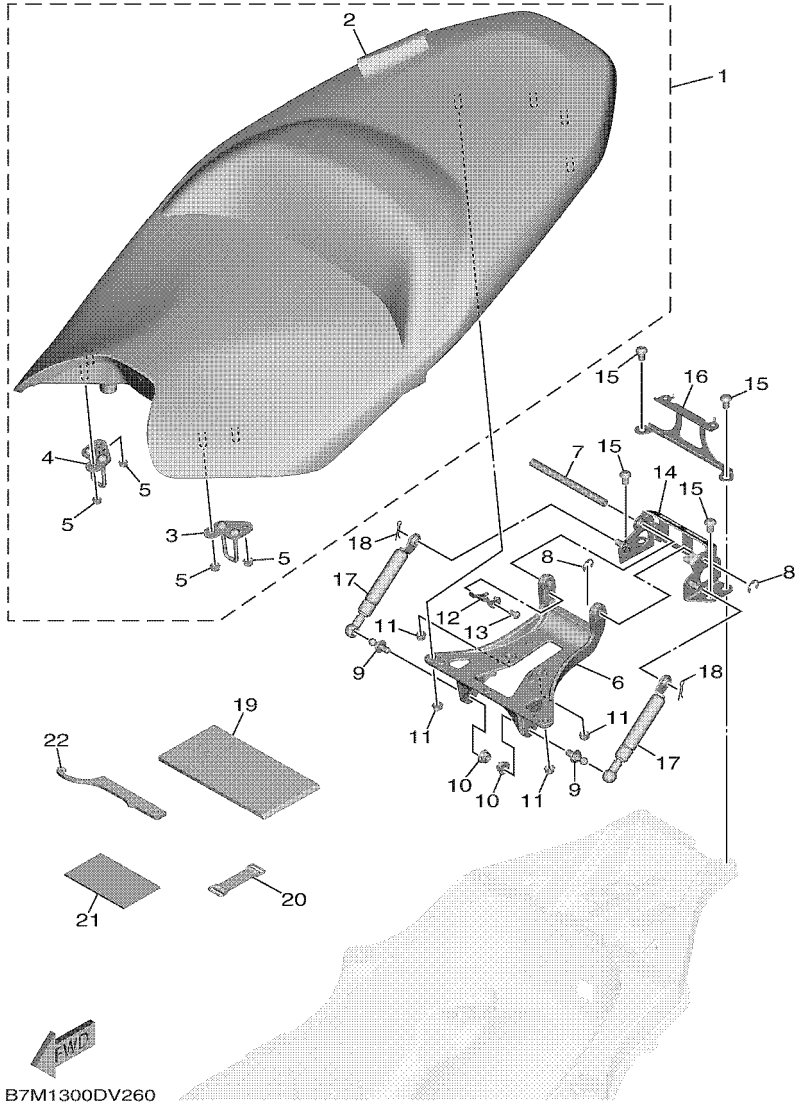

FIG. 26 SEAT

REF. NO.	PART NO.	DESCRIPTION	B7M1					REMARKS
1	BC3–24730–32	DOUBLE SEAT ASSY	1					UR FOR MDNMA
	BC3–24730–12	DOUBLE SEAT ASSY	1					UR FOR MDNM8
2	BC3–24731–32	.COVER, SEAT	1					UR FOR MDNMA
	BC3–24731–12	.COVER, SEAT	1					UR FOR MDNM8
3	BC3–24738–00	.BRACKET, SEAT	1					
4	BC3–24748–00	.BRACKET, SEAT	1					
5	95602–06200	.NUT, SELF-LOCKING	4					
6	2PW–24726–00	HINGE, SEAT	1					
7	2PW–24727–00	PIN, SEAT FITTING	1					
8	93430–09038	CIRCLIP	2					
9	4B5–2474E–00	ARM	2					
10	95602–08200	NUT, U FLANGE	2					
11	95602–06200	NUT, SELF-LOCKING	4					
12	2PW–24718–00	BRACKET, SEAT	1					
13	92012–06010	BOLT, BUTTON HEAD	1					
14	B7M–24769–00	HINGE, SEAT	1					
15	92012–08012	BOLT, BUTTON HEAD	4					
16	B7M–2475U–00	BRACKET, TAIL COVER	1					
17	4B5–2478G–04	STOPPER	2					
18	90468–16001	CLIP	2					
19	2PW–28100–10	TOOL KIT	1					
20	3TJ–82131–00	BAND, BATTERY	1					
21	B3T–28199–E0	MANUAL,OWNER'S	1					UR ENGLISH
	B3T–28199–F0	MANUAL,OWNER'S	1					UR FRENCH
	B3T–28199–G0	MANUAL,OWNER'S	1					UR GERMAN
	B3T–28199–H0	MANUAL,OWNER'S	1					UR ITALIAN
	B3T–28199–S0	MANUAL,OWNER'S	1					UR SPANISH

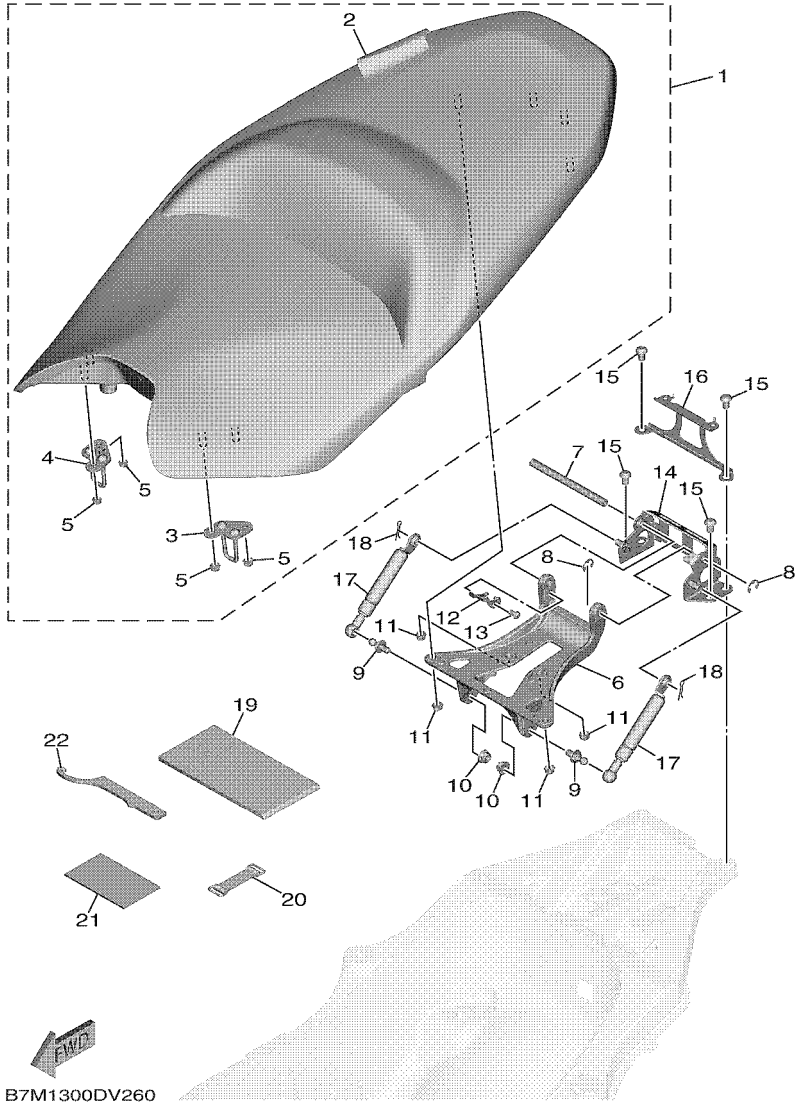

FIG. 26 SEAT

REF. NO.	PART NO.	DESCRIPTION	B7M1					REMARKS
21	B3T–F8199–D0	MANUAL,OWNER'S	1					UR DUTCH
	B3T–F8199–M0	MANUAL,OWNER'S	1					UR SWEDISH
	B3T–F8199–P0	MANUAL,OWNER'S	1					UR PORTUGUESE
22	1RC–28135–00	SPANNER, SPECIAL	1					

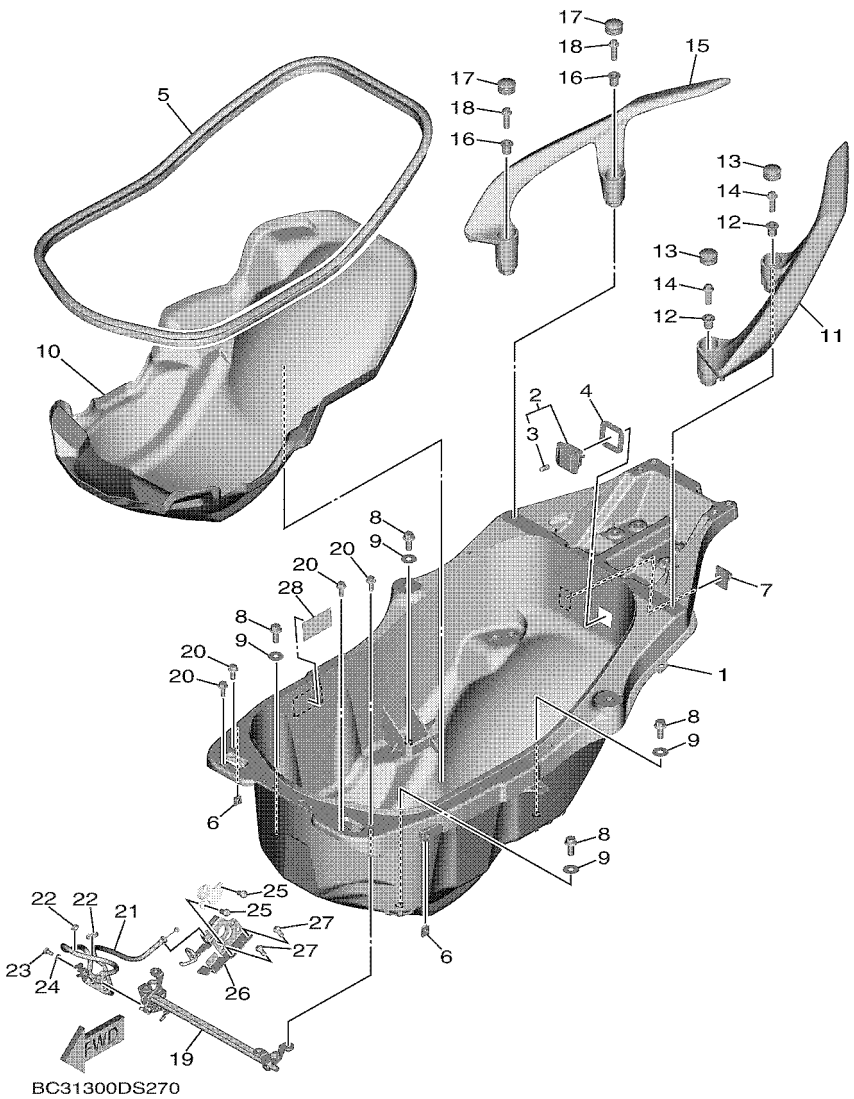

FIG. 27 SEAT 2

REF. NO.	PART NO.	DESCRIPTION	B7M1					REMARKS
1	BC3–2473R–00	BOX 1	1					
2	4HC–84770–00	LIGHT, ACCESSORY	1					
3	4HC–84347–00	.BULB (12V-2W)	1					
4	5GJ–2839M–00	SEAL, BOX 2	1					
5	BC3–2173M–00	SEAL 3	1					
6	90183–05076	NUT, SPRING	2					
7	90464–25160	CLAMP	1					
8	95D32–08020	BOLT, FLANGE DEEP RECESS	4					
9	90201–08103	WASHER, PLATE	4					
10	BC3–24747–00	DAMPER, SEAT	1					
11	BC3–2474A–00–P6	ASSIST, GRIP	1					UR FOR MDNMA
	BC3–2474A–00–P4	ASSIST, GRIP	1					UR FOR MDNM8
12	90387–08068	COLLAR	2					
13	4B5–2476U–00	PROTECTOR 1	2					
14	90105–08054	BOLT, FLANGE	2					
15	BC3–2474W–00–P6	ASSIST,GRIP 2	1					UR FOR MDNMA
	BC3–2474W–00–P4	ASSIST,GRIP 2	1					UR FOR MDNM8
16	90387–08068	COLLAR	2					
17	4B5–2476U–00	PROTECTOR 1	2					
18	90105–08054	BOLT, FLANGE	2					
19	BC3–24780–00	SEAT LOCK ASSY	1					
20	95D32–06016	BOLT, FLANGE DEEP RECESS	4					
21	BC3–2478D–00	SEAT LOCK CABLE ASSY	1					
22	3MA–82591–00	BAND	2					
23	97002–05010	BOLT	1					
24	92902–05600	WASHER, PLATE	1					
25	92012–06012	BOLT, BUTTON HEAD	2					

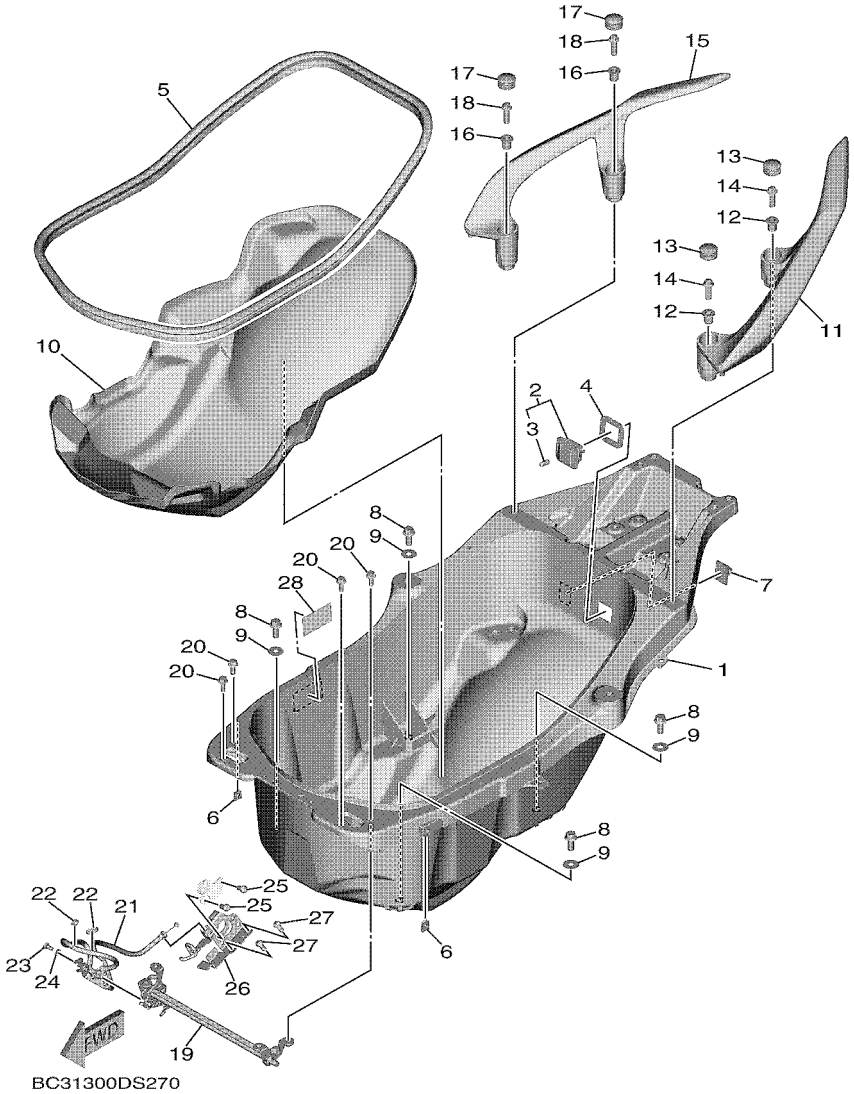

FIG. 27 SEAT 2

REF. NO.	PART NO.	DESCRIPTION	B7M1					REMARKS
26	BC3–2117K–00	STAY, LOCK	1					
27	92012–06012	BOLT, BUTTON HEAD	2					
28	BC3–21668–00	LABEL, TIRE	1					

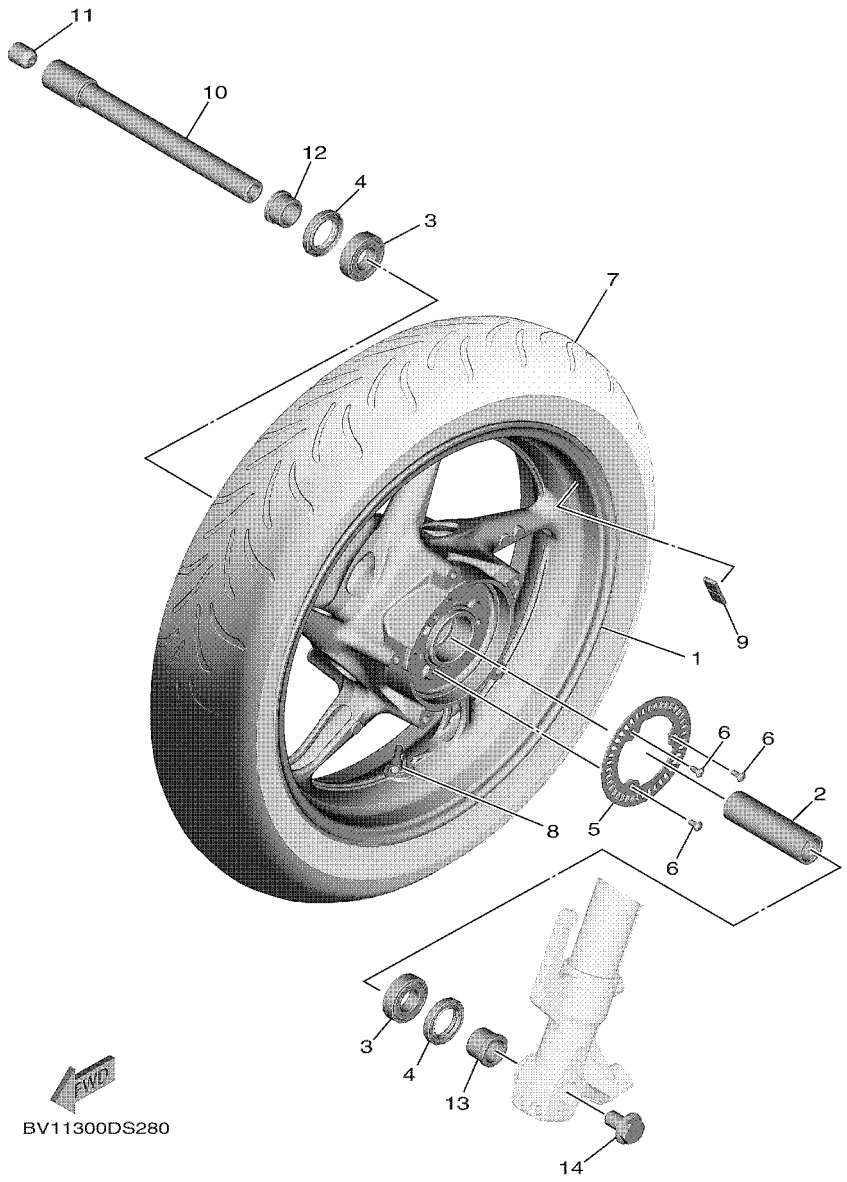

FIG. 28 FRONT WHEEL

REF. NO.	PART NO.	DESCRIPTION	B7M1					REMARKS
1	2PW–25168–00–8L	CAST WHEEL, FRONT	1					UR NG FOR MDNMA
	2PW–25168–00–P1	CAST WHEEL, FRONT	1					UR MBL2 FOR MDNM8
2	5EA–25117–00	SPACER, BEARING	1					
3	93306–07208	BEARING	2					
4	93106–28043	OIL SEAL	2					
5	2DR–2517G–00	ROTOR, SENSOR	1					
6	90149–05029	SCREW	3					
7	94112–15012	TIRE (120/70R15 M/C56H T/L BS)	1					BRIDESTONE
8	93900–00025	VALVE, RIM (PVR59A)	1					TAIHEIYO
9	23P–25398–00	BALANCER, WHEEL	1					UN
10	BC3–25181–00	AXLE, WHEEL	1					
11	5PW–25188–00	CAP	1					
12	90387–22016	COLLAR	1					
13	90387–22030	COLLAR	1					
14	90105–14002	BOLT, FLANGE	1					

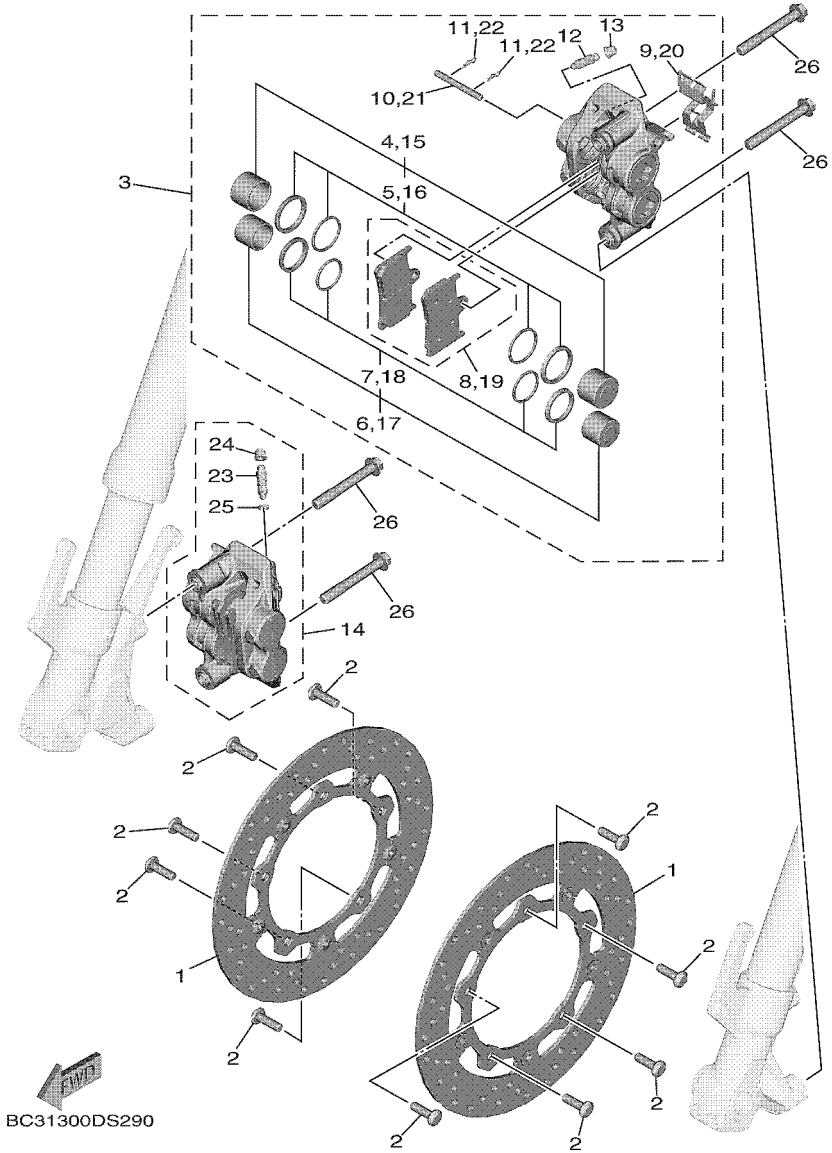

FIG. 29 FRONT BRAKE CALIPER

REF. NO.	PART NO.	DESCRIPTION	B7M1					REMARKS
1	59C–2581T–00	DISK BRAKE ASSY	2					
2	90109–083G4	BOLT	10					
3	2PW–2580T–20	CALIPER ASSY (LEFT)	1					
4	4SV–25802–10	.PISTON ASSY, CALIPER	1					
5	3GM–25803–10	..CALIPER SEAL KIT	1					
6	4SV–25802–00	.PISTON ASSY, CALIPER	1					
7	3MA–25803–10	..CALIPER SEAL KIT	1					
8	4B5–25805–00	.BRAKE PAD KIT	1					
9	13S–25919–00	.SUPPORT, PAD	1					
10	4SV–25924–00	.PIN, PAD	1					
11	3GM–25925–00	.CLIP	2					
12	1J3–25824–00	.SCREW, BLEED	1					
13	306–25825–01	.CAP	1					
14	2PW–2580U–30	CALIPER ASSY (RIGHT)	1					
15	4SV–25802–10	.PISTON ASSY, CALIPER	1					
16	3GM–25803–10	..CALIPER SEAL KIT	1					
17	4SV–25802–00	.PISTON ASSY, CALIPER	1					
18	3MA–25803–10	..CALIPER SEAL KIT	1					
19	4B5–25805–00	.BRAKE PAD KIT	1					
20	13S–25919–00	.SUPPORT, PAD	1					
21	4SV–25924–00	.PIN, PAD	1					
22	3GM–25925–00	.CLIP	2					
23	5VS–25824–00	.SCREW, BLEED	1					
24	306–25825–01	.CAP	1					
25	5VS–25975–00	.RUBBER, BUSHING	1					
26	90105–10440	BOLT, FLANGE	4					

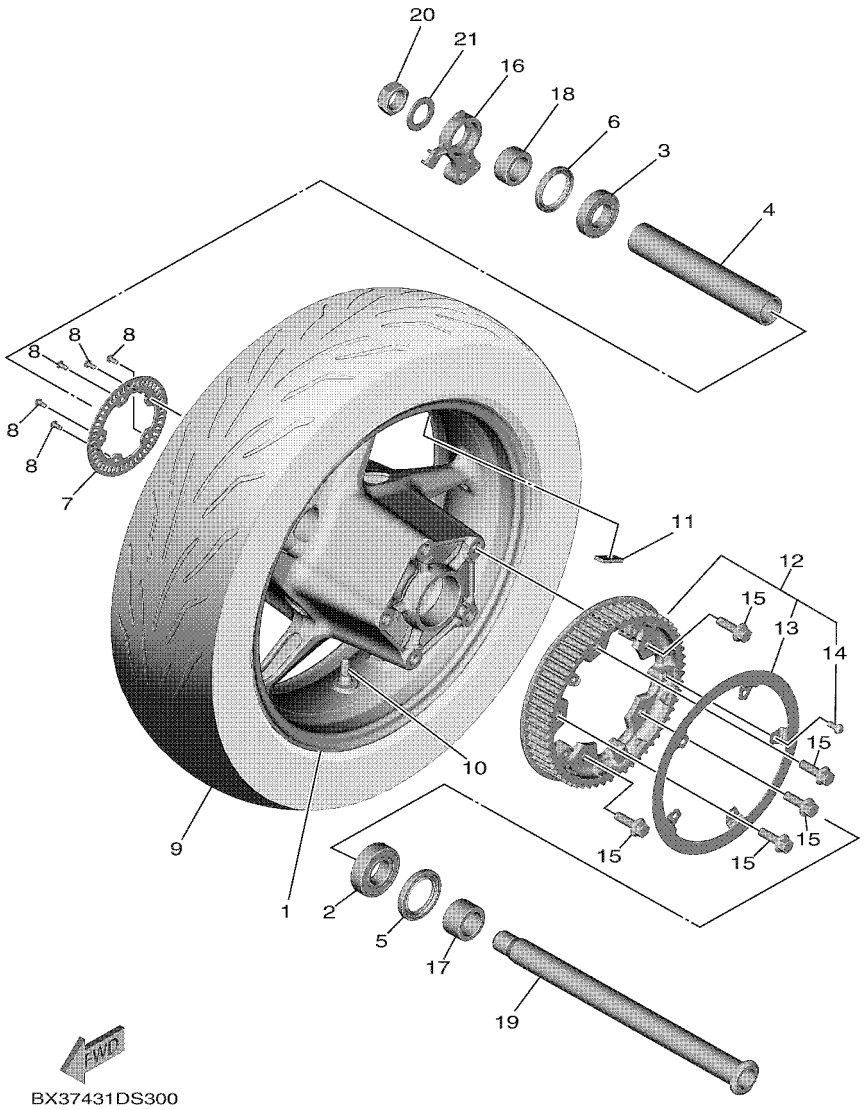

FIG. 30 REAR WHEEL

REF. NO.	PART NO.	DESCRIPTION	B7M1					REMARKS
1	BC3–25338–00–8L	CAST WHEEL, REAR	1					UR NG FOR MDNMA
	BC3–25338–00–P0	CAST WHEEL, REAR	1					UR MBL2 FOR MDNM8
2	93306–205B5	BEARING	1					
3	93306–07809	BEARING	1					
4	59C–25317–01	SPACER, BEARING	1					
5	93106–40013	OIL SEAL	1					
6	93106–40027	OIL SEAL	1					
7	2PW–2517G–00	ROTOR, SENSOR	1					
8	90149–05029	SCREW	5					
9	94116–15019	TIRE (160/60R15 M/C67H T/L BS)	1					BRIDGESTONE
10	93900–00030	VALVE, RIM (TR412)	1					TAIHEIYO
11	23P–25398–00	BALANCER, WHEEL	1					UN
12	BC3–25470–00	SPROCKET, DRIVEN (59T)	1					
13	BC3–27883–00	.GEAR, RING	1					
14	90111–06064	.BOLT,HEX. SOCKET BUTTON	5					
15	90105–10237	BOLT, FLANGE	5					
16	2PW–2537A–00	HOUSING, SENSOR REAR	1					
17	BC3–25376–00	COLLAR, WHEEL	1					
18	2PW–25377–10	COLLAR, WHEEL	1					
19	BC3–25381–00	AXLE, WHEEL	1					
20	90185–24002	NUT, SELF-LOCKING	1					
21	90201–25020	WASHER, PLATE	1					

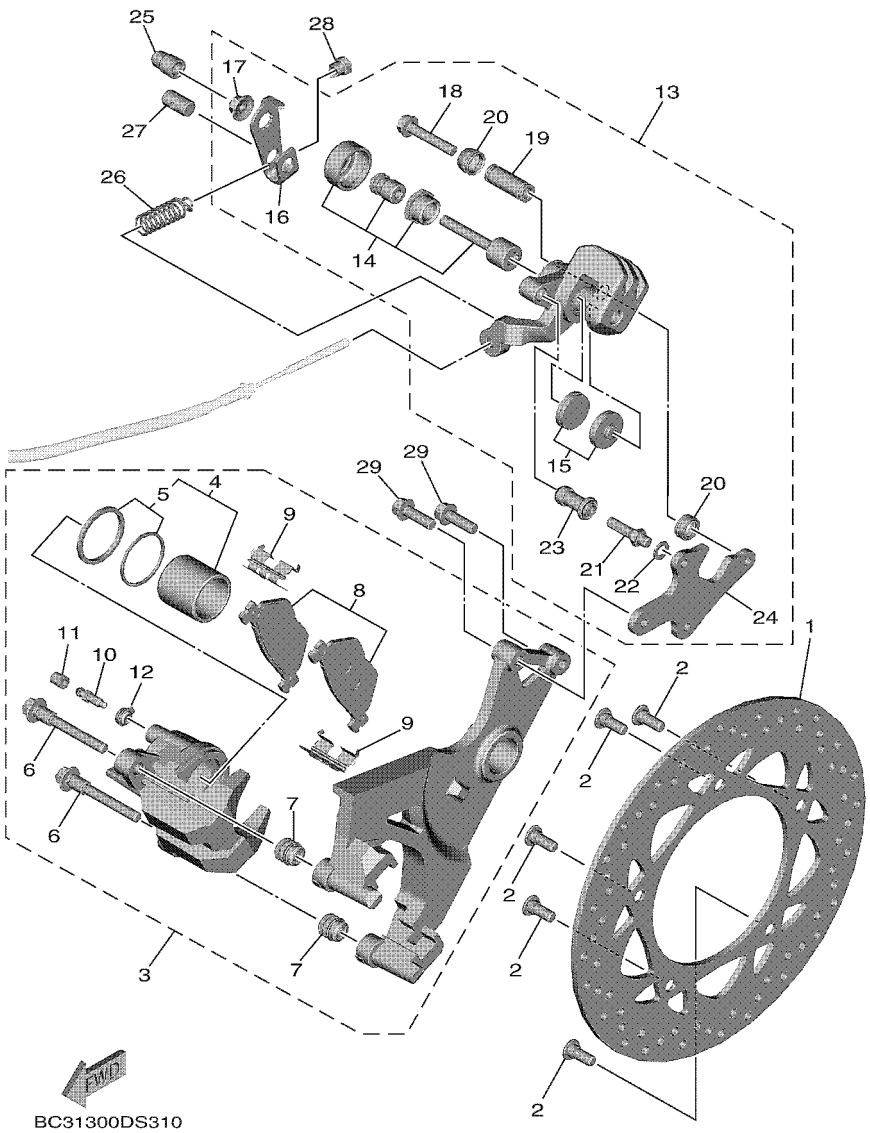

FIG. 31 REAR BRAKE CALIPER

REF. NO.	PART NO.	DESCRIPTION	B7M1					REMARKS
1	59C–2582W–00	DISK, REAR BRAKE 2	1					
2	90149–08009	SCREW	5					
3	59C–2580W–00	CALIPER ASSY, REAR 2	1					
4	59C–25802–00	.PISTON ASSY, CALIPER	1					
5	59C–25803–00	..CALIPER SEAL KIT	1					
6	59C–25914–00	.PIN, SLIDE	2					
7	4TT–25937–00	.BOOT 2	2					
8	59C–25806–00	.BRAKE PAD KIT 2	1					
9	5JW–25919–00	.SUPPORT, PAD	2					
10	5GM–25824–00	.SCREW, BLEED	1					
11	1D7–25825–00	.CAP	1					
12	5GM–25975–00	.RUBBER, BUSHING	1					
13	2PW–259A0–00	CALIPER ASSY 2	1					
14	59C–25802–50	.PISTON ASSY, CALIPER	1					
15	59C–25805–50	.BRAKE PAD KIT	1					
16	59C–259A3–00	.ARM	1					
17	59C–259A4–00	.NUT, ADJUSTING	1					
18	59C–25914–50	.PIN, SLIDE	1					
19	59C–25838–00	.SLEEVE, CALIPER	1					
20	1UY–25917–51	.BOOT, CALIPER	2					
21	1UY–25926–51	.BOLT	1					
22	1UY–25938–51	.WASHER, SPRING	1					
23	1UY–25937–51	.BOOT 2	1					
24	2PW–25921–50	.BRACKET, SUPPORT	1					
25	59C–25825–00	CAP	1					
26	59C–25333–00	SPRING, RETURN	1					
27	90249–12004	PIN	1					

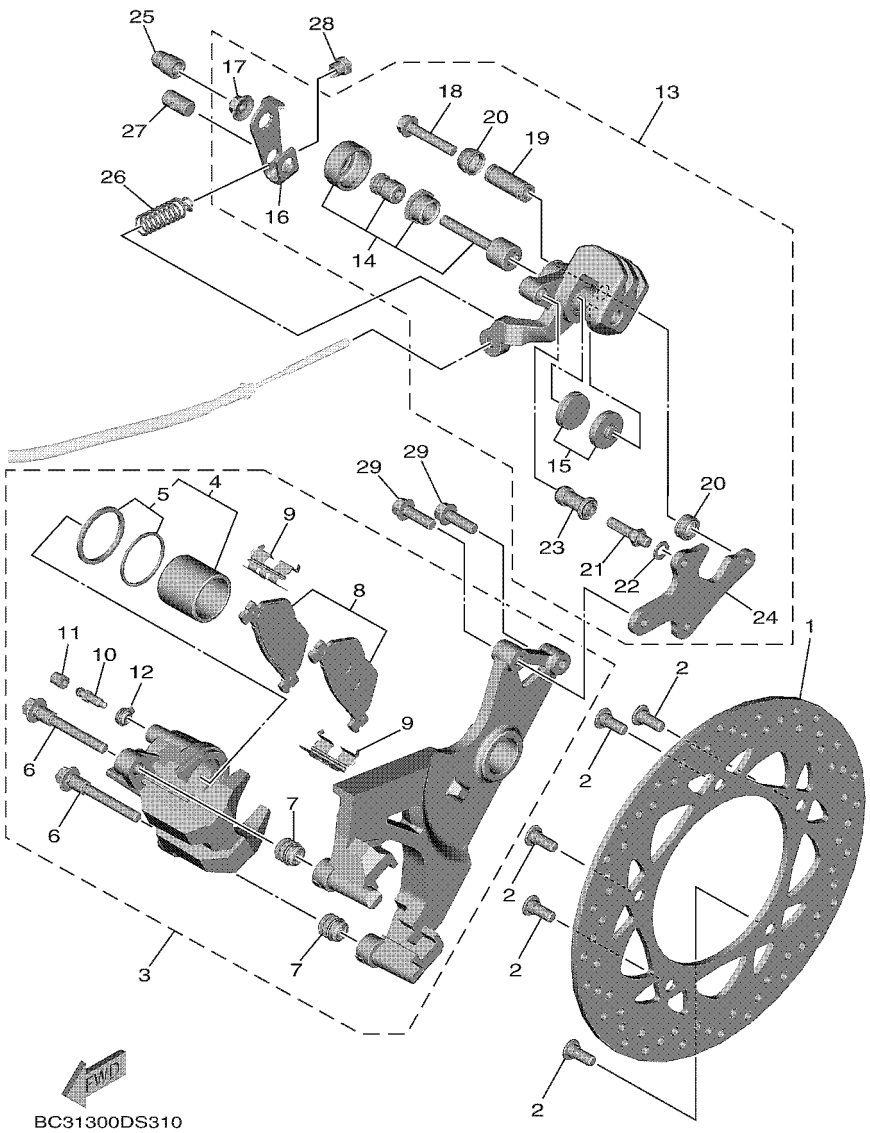

FIG. 31 REAR BRAKE CALIPER

REF. NO.	PART NO.	DESCRIPTION	B7M1					REMARKS
28	90179–06018	NUT	1					
29	90105–08440	BOLT, FLANGE	2					

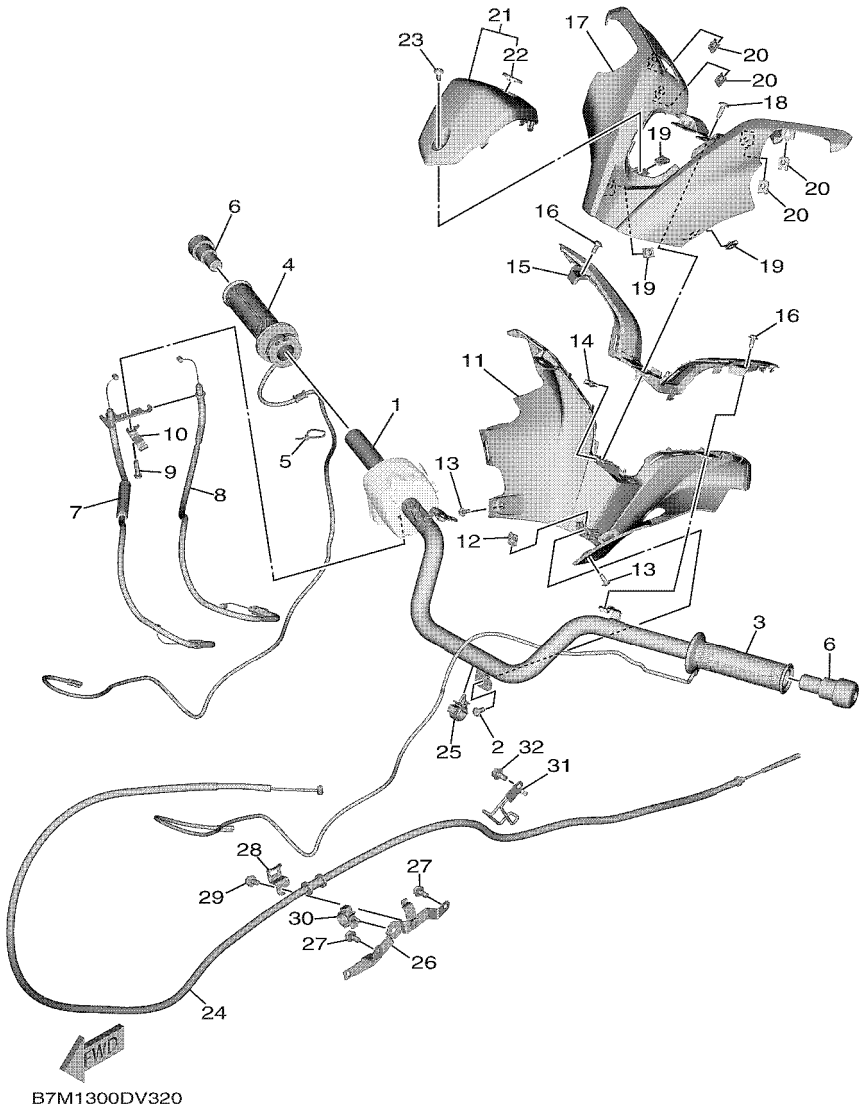

FIG. 32 STEERING HANDLE & CABLE

REF. NO.	PART NO.	DESCRIPTION	B7M1					REMARKS
1	B7M–26110–00	HANDLE COMP.	1					
2	90159–05032	SCREW, WITH WASHER	1					
3	BC3–82963–00	GRIP, WARMER (LEFT)	1					
4	B7M–82960–00	GRIP, WARMER	1					
5	90465–10098	CLAMP	1					
6	BC3–26246–00	END, GRIP	2					
7	BC3–26311–00	WIRE, THROTTLE 1	1					
8	BC3–26312–00	CABLE, THROTTLE 2	1					
9	98517–05020	SCREW, PAN HEAD	1					
10	BC3–82361–00	CLAMP, CORD	1					
11	BC3–26145–00	COVER, HANDLE UPPER 2	1					
12	90183–05076	NUT, SPRING	1					
13	90167–05079	SCREW, TAPPING	2					
14	90183–05042	NUT, SPRING	1					
15	BC3–26216–A0	CAP, HANDLEBAR COVER	1					
16	90109–05012	BOLT	2					
17	BC3–26143–00	COVER, HANDLE UPPER 1	1					
18	90167–05076	SCREW, TAPPING	1					
19	90183–05042	NUT, SPRING	3					
20	90183–05076	NUT, SPRING	4					
21	BC3–26217–00	CAP, COVER HANDLE 2	1					
22	8GC–2836B–02	.TUNING FORK MARK	1					
23	90167–05079	SCREW, TAPPING	1					
24	B7M–2835X–00	WIRE	1					
25	90464–16006	CLAMP	1					
26	BC3–26279–00	GUIDE, CABLE	1					
27	95D32–06012	BOLT, FLANGE DEEP RECESS	2					

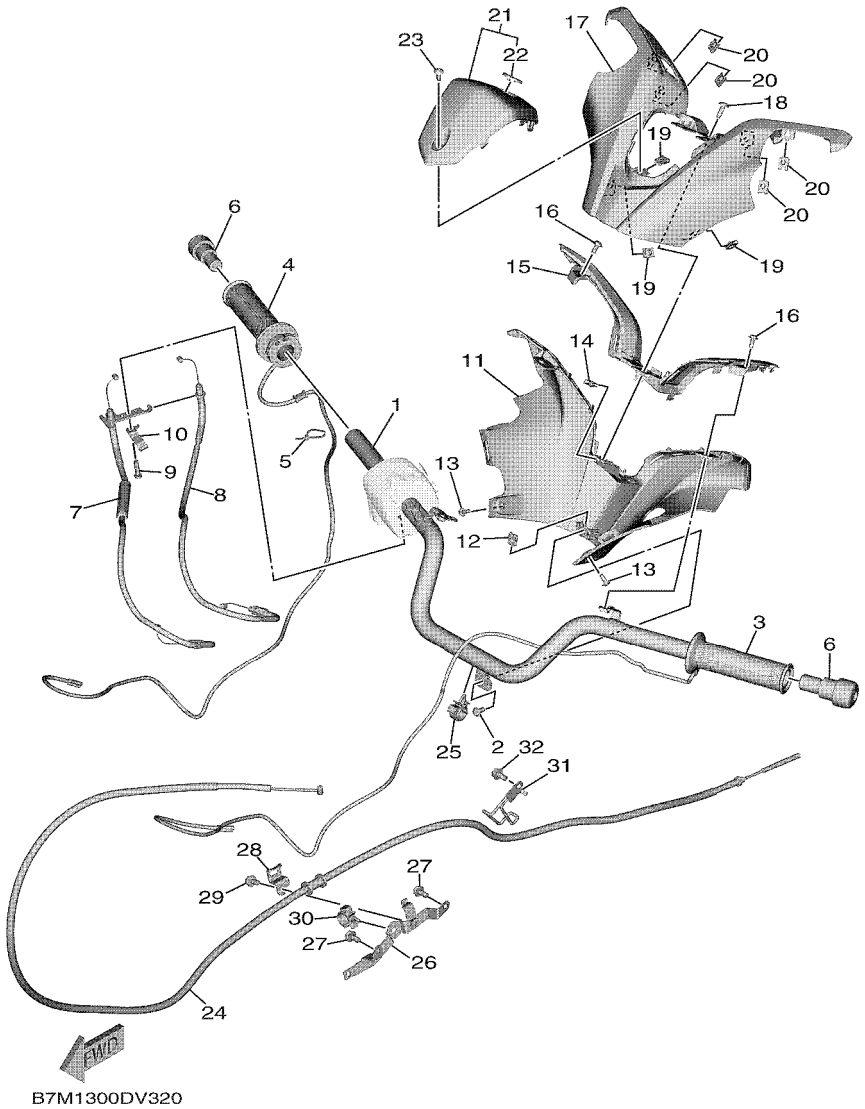

FIG. 32 STEERING HANDLE & CABLE

REF. NO.	PART NO.	DESCRIPTION	B7M1					REMARKS
28	4B5–26131–00	GUIDE, CABLE 1	1					
29	95D32–06010	BOLT, FLANGE DEEP RECESS	1					
30	90464–16006	CLAMP	1					
31	BC3–27982–00	BRACKET, WIRE	1					
32	95D32–06012	BOLT, FLANGE DEEP RECESS	1					

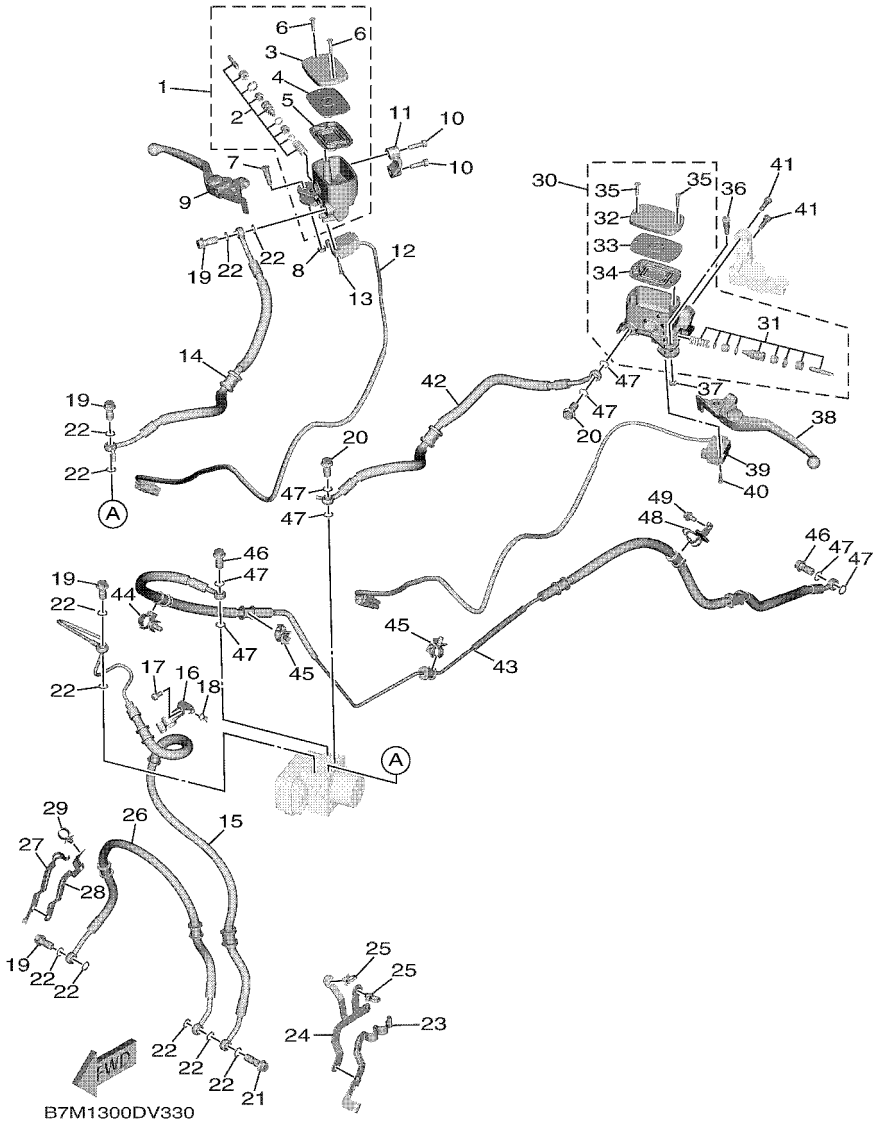

FIG. 33 FRONT MASTER CYLINDER

REF. NO.	PART NO.	DESCRIPTION	B7M1					REMARKS
1	BC3–2580A–00	MASTER CYLINDER SUB ASSY 2	1					
2	BC3–25807–00	.CYLINDER KIT, MASTER	1					
3	4B5–25852–00	.CAP, RESERVOIR	1					
4	4B5–25855–00	.BUSH,DIAPHRAGM	1					
5	4B5–25854–00	.DIAPHRAGM, RESERVOIR	1					
6	5VS–2589H–00	.SCREW	2					
7	5VS–2589F–00	BOLT, LEVER	1					
8	95617–06100	NUT, SELF-LOCKING	1					
9	2PW–83922–00	LEVER 2	1					
10	5VS–26332–00	BOLT	2					
11	2PW–25867–00	BRACKET, MASTER CYLINDER	1					
12	BC3–83980–00	FRONT STOP SWITCH ASSY	1					
13	97602–04214	SCREW, PAN HEAD WITH WASHER	1					
14	BC3–25874–00	HOSE, BRAKE 3	1					
15	BC3–25873–01	HOSE, BRAKE 2	1					
16	BC3–25887–00	HOLDER, BRAKE HOSE 3	1					
17	92012–06012	BOLT, BUTTON HEAD	1					
18	90465–10098	CLAMP	1					
19	90401–10020	BOLT, UNION	4					
20	90401–10020	BOLT, UNION	2					
21	90401–10038	BOLT, UNION	1					
22	90430–10005	GASKET	11					
23	BC3–25875–00	HOLDER, BRAKE HOSE 1	1					
24	BC3–2612E–00	BRACKET	1					
25	90464–12001	CLAMP	2					
26	BC3–2584D–00	HOSE, BRAKE	1					
27	BC3–25876–00	HOLDER, BRAKE HOSE 2	1					

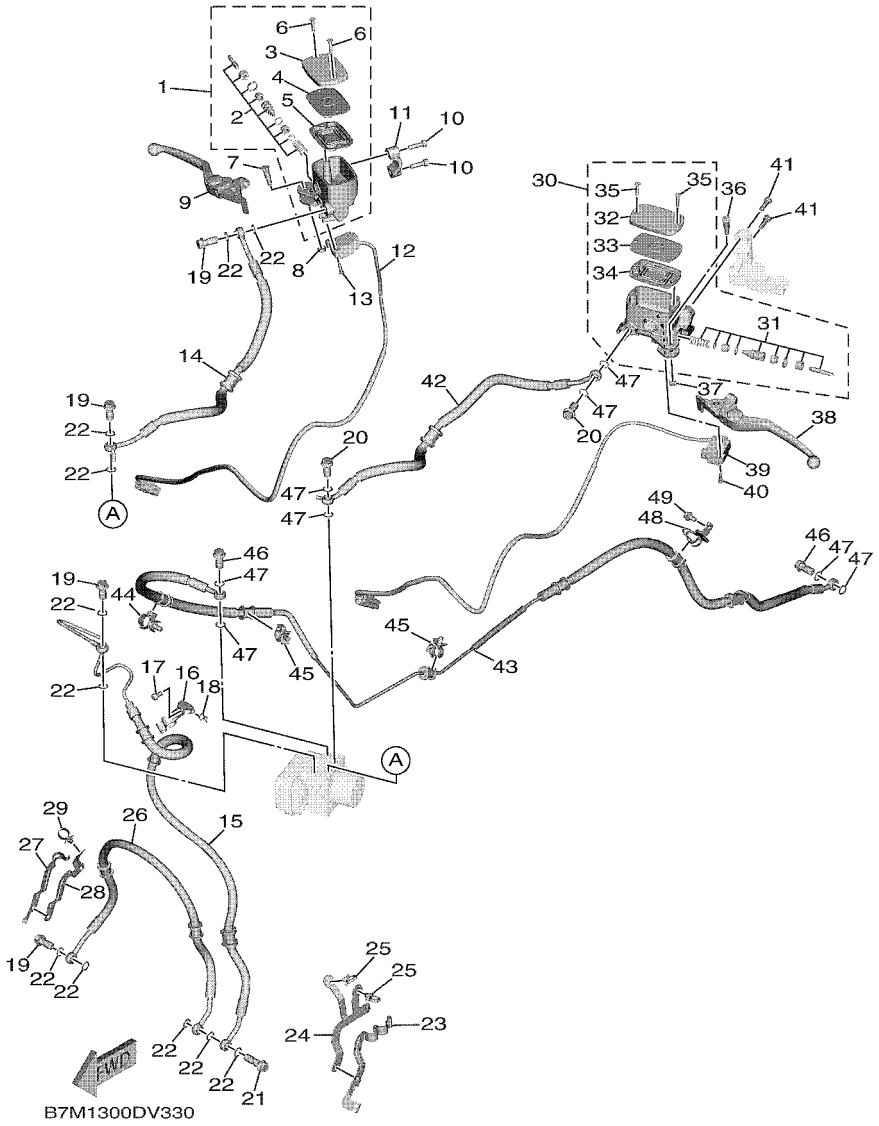

FIG. 33 FRONT MASTER CYLINDER

REF. NO.	PART NO.	DESCRIPTION	B7M1					REMARKS
28	BC3–2612K–00	BRKT 2	1					
29	90464–13133	CLAMP	1					
30	BC3–2580A–10	MASTER CYLINDER SUB ASSY 2	1					
31	BC3–25807–10	.CYLINDER KIT, MASTER	1					
32	4B5–25852–00	.CAP, RESERVOIR	1					
33	4B5–25855–00	.BUSH,DIAPHRAGM	1					
34	4B5–25854–00	.DIAPHRAGM, RESERVOIR	1					
35	5VS–2589H–00	.SCREW	2					
36	5VS–2589F–00	BOLT, LEVER	1					
37	95617–06100	NUT, SELF-LOCKING	1					
38	2PW–83912–00	LEVER 1	1					
39	BC3–82917–00	SWITCH	1					
40	97602–04214	SCREW, PAN HEAD WITH WASHER	1					
41	5VS–26332–00	BOLT	2					
42	BC3–2584B–00	HOSE, BRAKE	1					
43	B7M–2584C–00	HOSE, BRAKE	1					
44	90464–16012	CLAMP	1					
45	90464–14013	CLAMP	2					
46	90401–10020	BOLT, UNION	2					
47	90430–10005	GASKET	8					
48	BC3–25886–00	HOLDER, BRAKE HOSE	1					
49	95D32–06012	BOLT, FLANGE DEEP RECESS	1					

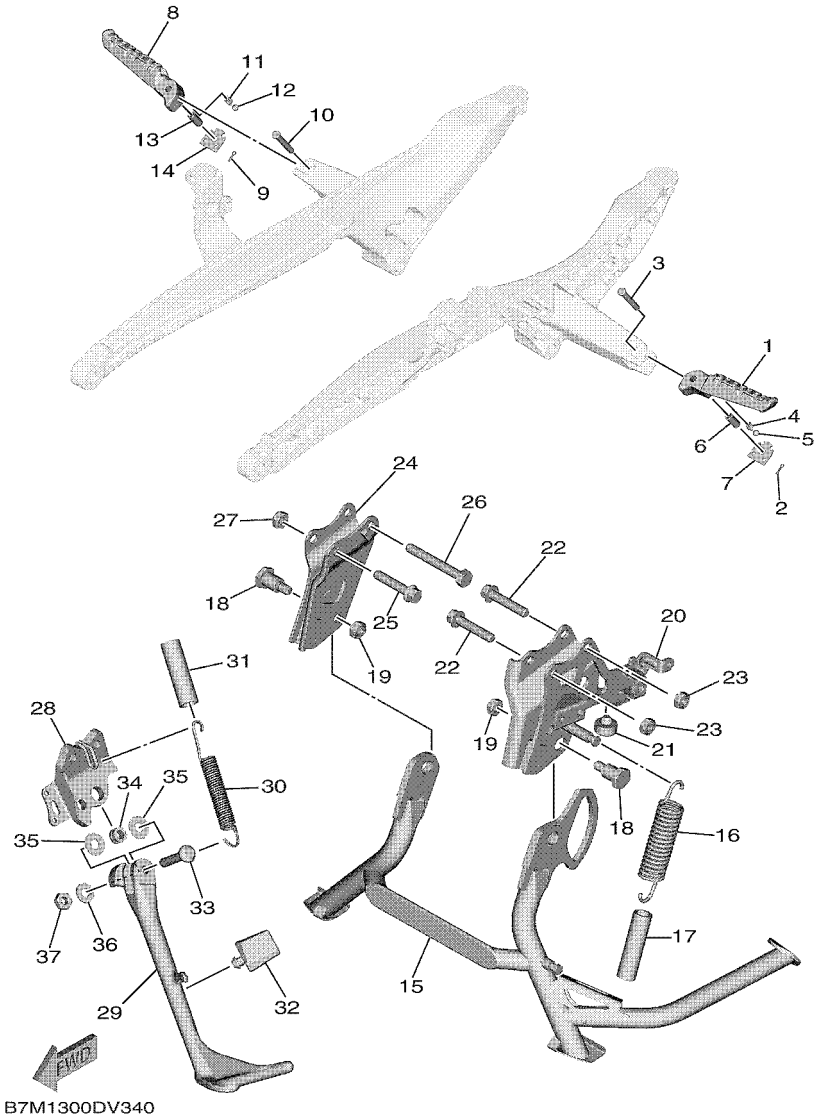

FIG. 34 STAND & FOOTREST

REF. NO.	PART NO.	DESCRIPTION	B7M1					REMARKS
1	B7M–27431–00	FOOTREST, REAR 1	1					
2	91402–20012	PIN, COTTER	1					
3	91702–06038	PIN, CLEVIS	1					
4	90501–15001	SPRING, COMPRESSION	1					
5	93501–04011	BALL	1					
6	90387–064H8	COLLAR	1					
7	4B5–27437–00	WASHER, SPECIAL	1					
8	B7M–27441–00	FOOTREST, REAR 2	1					
9	91402–20012	PIN, COTTER	1					
10	91702–06038	PIN, CLEVIS	1					
11	90501–15001	SPRING, COMPRESSION	1					
12	93501–04011	BALL	1					
13	90387–064H8	COLLAR	1					
14	4B5–27437–00	WASHER, SPECIAL	1					
15	B7M–27111–00	STAND, MAIN	1					
16	90506–40007	SPRING, TENSION	1					
17	BC3–2247A–00	HOSE 1	1					
18	90109–10067	BOLT	2					
19	90185–10060	NUT, SELF-LOCKING	2					
20	BC3–27151–00	BRACKET, MAIN STAND	1					
21	36C–27114–00	STOPPER, MAIN STAND	1					
22	90105–10283	BOLT, FLANGE	2					
23	90185–10022	NUT, SELF-LOCKING	2					
24	B7M–27152–00	BRACKET, MAIN STAND 2	1					
25	90105–10283	BOLT, FLANGE	1					
26	90101–10046	BOLT	1					
27	90185–10022	NUT, SELF-LOCKING	1					

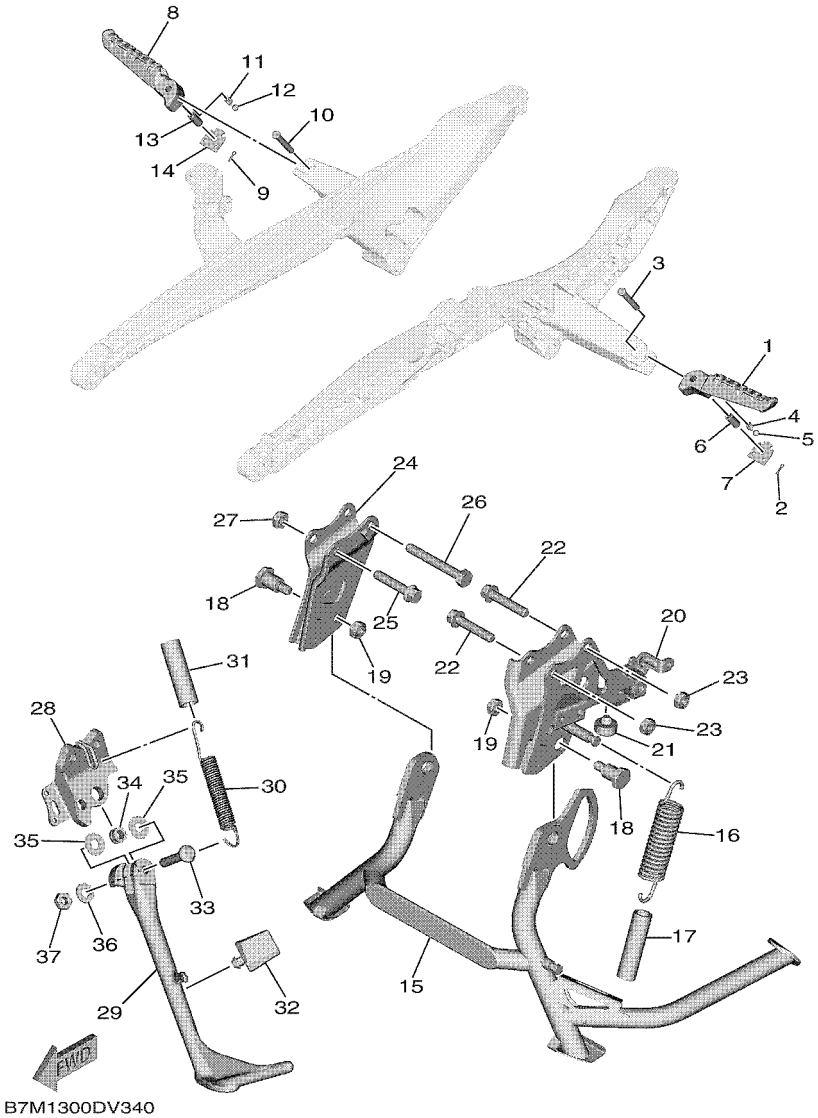

FIG. 34 STAND & FOOTREST

REF. NO.	PART NO.	DESCRIPTION	B7M1					REMARKS
28	BC3–27321–00	BRACKET, SIDE STAND	1					
29	59C–27311–00	STAND, SIDE	1					
30	90506–23014	SPRING, TENSION	1					
31	90445–217G3	HOSE (L70)	1					
32	BC3–27114–00	STOPPER, MAIN STAND	1					
33	90111–10007	BOLT,HEX. SOCKET BUTTON	1					
34	90387–10020	COLLAR	1					
35	90201–10051	WASHER, PLATE	2					
36	90201–10035	WASHER, PLATE	1					
37	90185–10012	NUT, SELF-LOCKING	1					

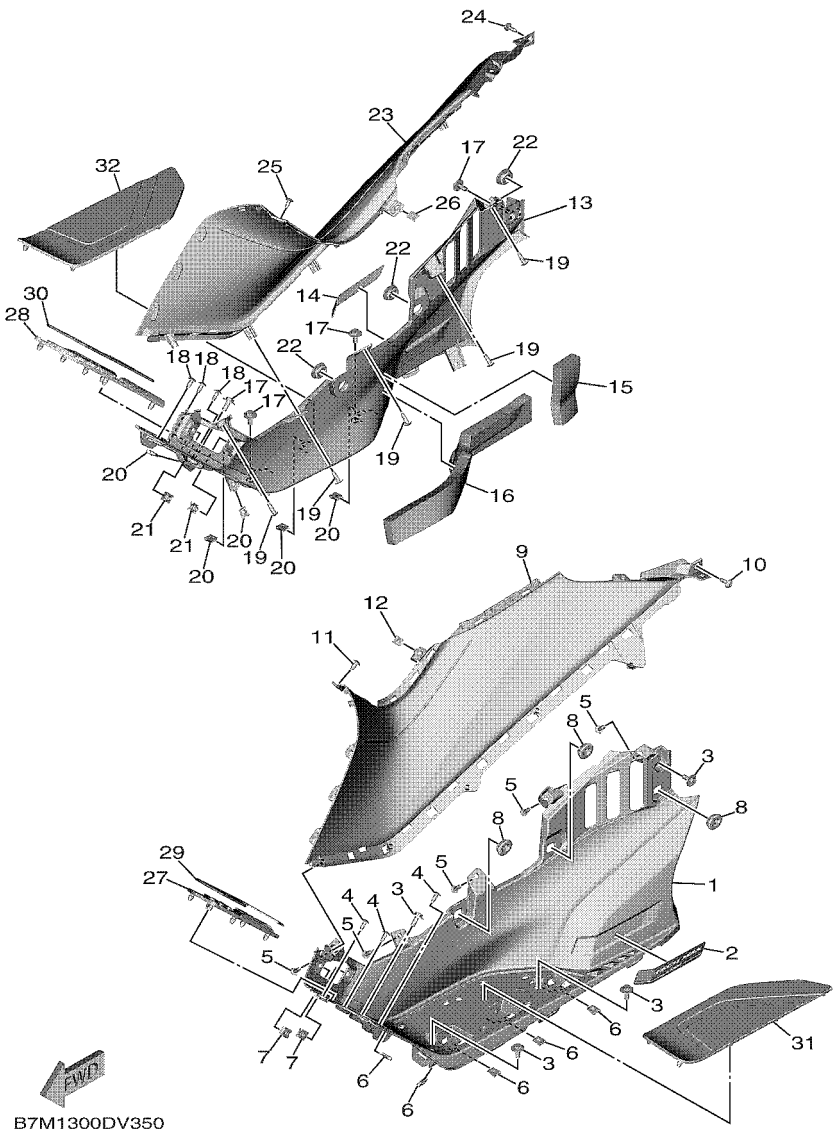

FIG. 35 STAND & FOOTREST 2

REF. NO.	PART NO.	DESCRIPTION	B7M1					REMARKS
1	BC3–27481–00	BOARD, FOOTREST	1					
2	B7M–27453–01	COVER 1	1					
3	90119–06235	BOLT, WITH WASHER	4					
4	97702–50012	SCREW, TAPPING	3					
5	97702–50016	SCREW,TAPPING	5					
6	90183–05042	NUT, SPRING	5					
7	90183–060A6	NUT, SPRING	2					
8	90480–01559	GROMMET	3					
9	BC3–2837L–00	PANEL, CONSOLE 1	1					
10	90109–05018	BOLT	1					
11	97702–50012	SCREW, TAPPING	1					
12	90183–05042	NUT, SPRING	1					
13	BC3–27488–00	BOARD, FOOTREST 2	1					
14	B7M–27463–01	COVER 2	1					
15	90520–20009	DAMPER, PLATE	1					
16	90520–20011	DAMPER, PLATE	1					
17	90119–06235	BOLT, WITH WASHER	4					
18	97702–50012	SCREW, TAPPING	3					
19	97702–50016	SCREW,TAPPING	5					
20	90183–05042	NUT, SPRING	5					
21	90183–060A6	NUT, SPRING	2					
22	90480–01559	GROMMET	3					
23	BC3–2837M–00	PANEL, CONSOLE 2	1					
24	90109–05018	BOLT	1					
25	97702–50012	SCREW, TAPPING	1					
26	90183–05042	NUT, SPRING	1					
27	2PW–27483–00	MAT 1	1					

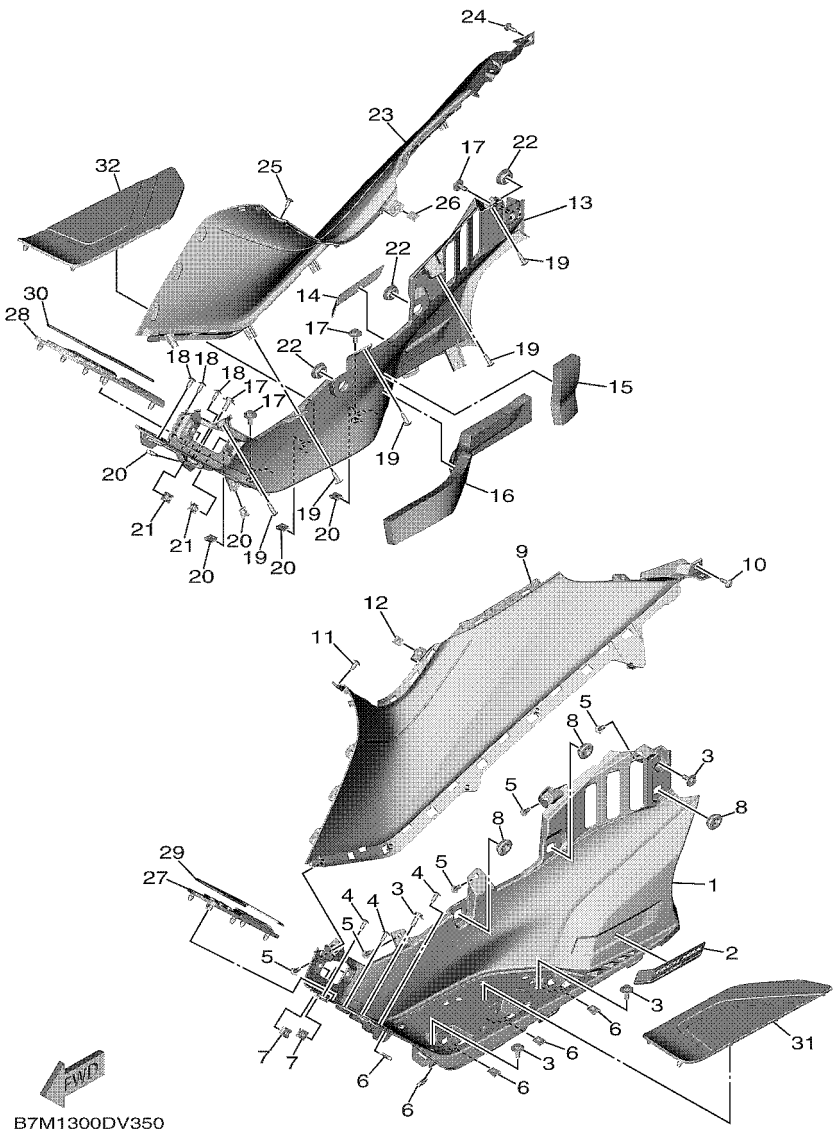

FIG. 35 STAND & FOOTREST 2

REF. NO.	PART NO.	DESCRIPTION	B7M1					REMARKS
28	2PW–27484–00	MAT 2	1					
29	2PW–27413–00	COVER, FOOTREST	1					
30	2PW–27423–00	COVER, FOOTREST	1					
31	BC3–27493–00	MAT 3	1					
32	BC3–27494–00	MAT 4	1					

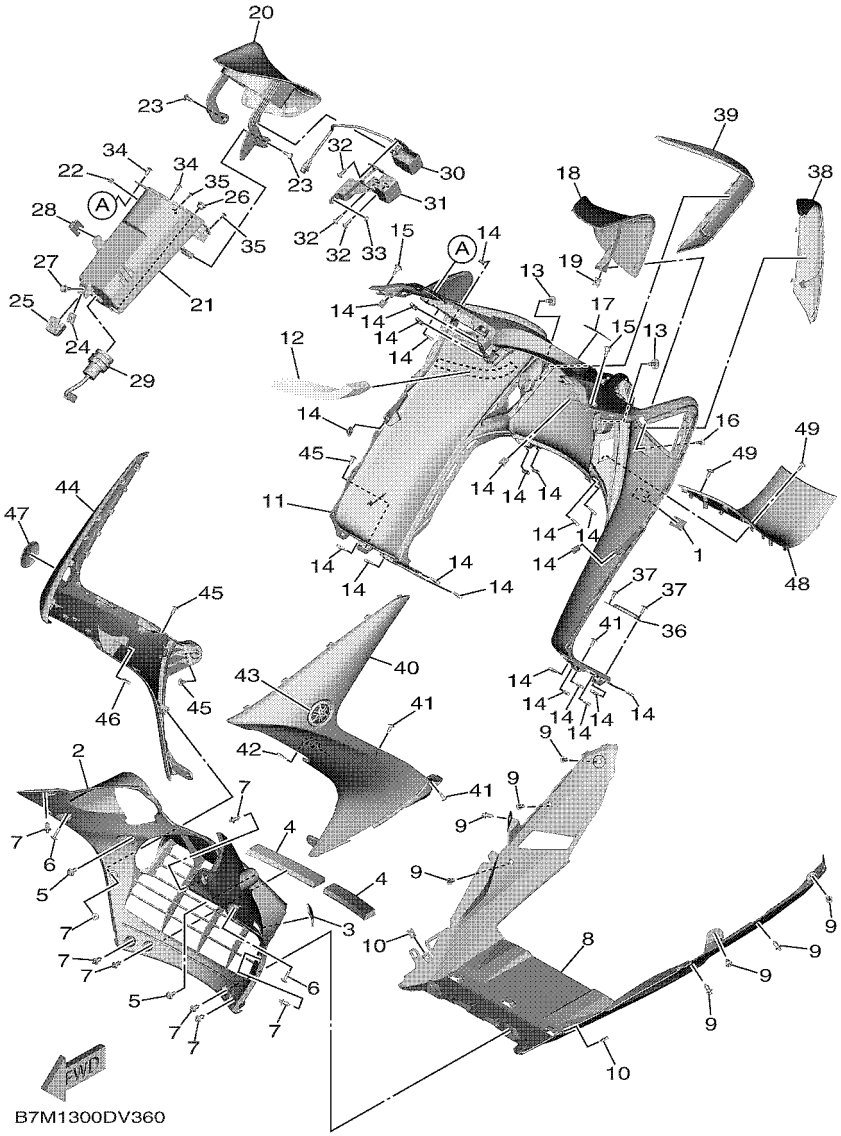

FIG. 36 LEG SHIELD

REF. NO.	PART NO.	DESCRIPTION	B7M1					REMARKS
1	26P–21568–00	LABEL, WARNING	1					
2	B7M–21557–00	DUCT, AIR	1					
3	3XV–21778–00	DAMPER, LOCATING 1	1					
4	90520–10015	DAMPER, PLATE	2					
5	90109–06264	BOLT	2					
6	90167–05076	SCREW, TAPPING	2					
7	90269–06008	RIVET	8					
8	BC3–21553–00	FENDER, INNER 2	1					
9	90269–06008	RIVET	8					
10	90183–05042	NUT, SPRING	2					
11	BC3–28311–00	LEG SHIELD 1	1					
12	5EA–2174Y–00	DAMPER	1					
13	90159–06021	SCREW, WITH WASHER	2					
14	90183–05042	NUT, SPRING	22					
15	90109–05018	BOLT	2					
16	90169–05001	TAPPING SCREW	1					
17	4B5–26031–00	EMBLEM, 3D	1					
18	BC3–28313–00	LID	1					
19	90183–05042	NUT, SPRING	1					
20	BC3–W283B–02	LID ASSY	1					
21	BC3–W28AL–02	BOX ASSY	1					
22	BC3–2836T–00	DAMPER, LOCATING 1	1					
23	97702–50016	SCREW,TAPPING	2					
24	90183–060A6	NUT, SPRING	1					
25	BC3–28227–00	DAMPER 2	1					
26	90338–10132	PLUG	1					
27	90159–06022	SCREW, WITH WASHER	1					

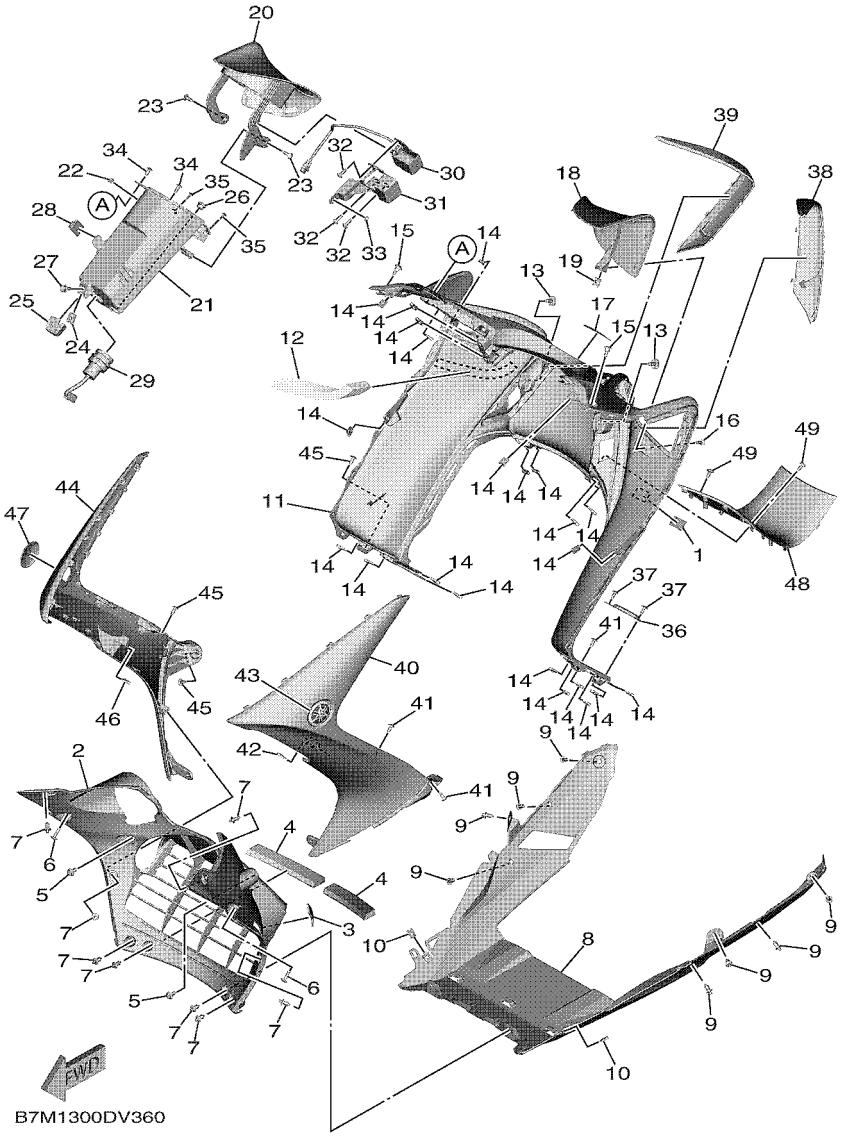

FIG. 36 LEG SHIELD

REF. NO.	PART NO.	DESCRIPTION	B7M1					REMARKS
28	90464–25160	CLAMP	1					
29	BC3–8254B–00	TERMINAL COMP.	1					
30	BC3–86111–10	COIL, SOLENOID	1					
31	BC3–2834V–00	PROTECTOR 1	1					
32	97702–50016	SCREW,TAPPING	3					
33	90183–05M02	NUT, SPRING	1					
34	97707–50012	SCREW, TRUSS HEAD TAPPING	2					
35	90269–03001	RIVET	2					
36	BC3–2842M–00	COVER 1	1					
37	97707–50012	SCREW, TRUSS HEAD TAPPING	2					
38	BC3–28345–A0	MOLE 1	1					
39	BC3–28346–A0	MOLE 2	1					
40	B7M–2835U–00–P0	PANEL 1	1					UR MBL2 FOR MDNMA
	B7M–2835U–00–P1	PANEL 1	1					UR SMX FOR MDNM8
41	97702–50012	SCREW, TAPPING	3					
42	90183–05042	NUT, SPRING	1					
43	1RC–2413B–01	EMBLEM	1					
44	B7M–2835V–00–P0	PANEL 2	1					UR MBL2 FOR MDNMA
	B7M–2835V–00–P1	PANEL 2	1					UR SMX FOR MDNM8
45	97702–50012	SCREW, TAPPING	3					
46	90183–05042	NUT, SPRING	1					
47	1RC–2413B–01	EMBLEM	1					
48	B7M–28365–00	COVER	1					
49	90167–05079	SCREW, TAPPING	2					

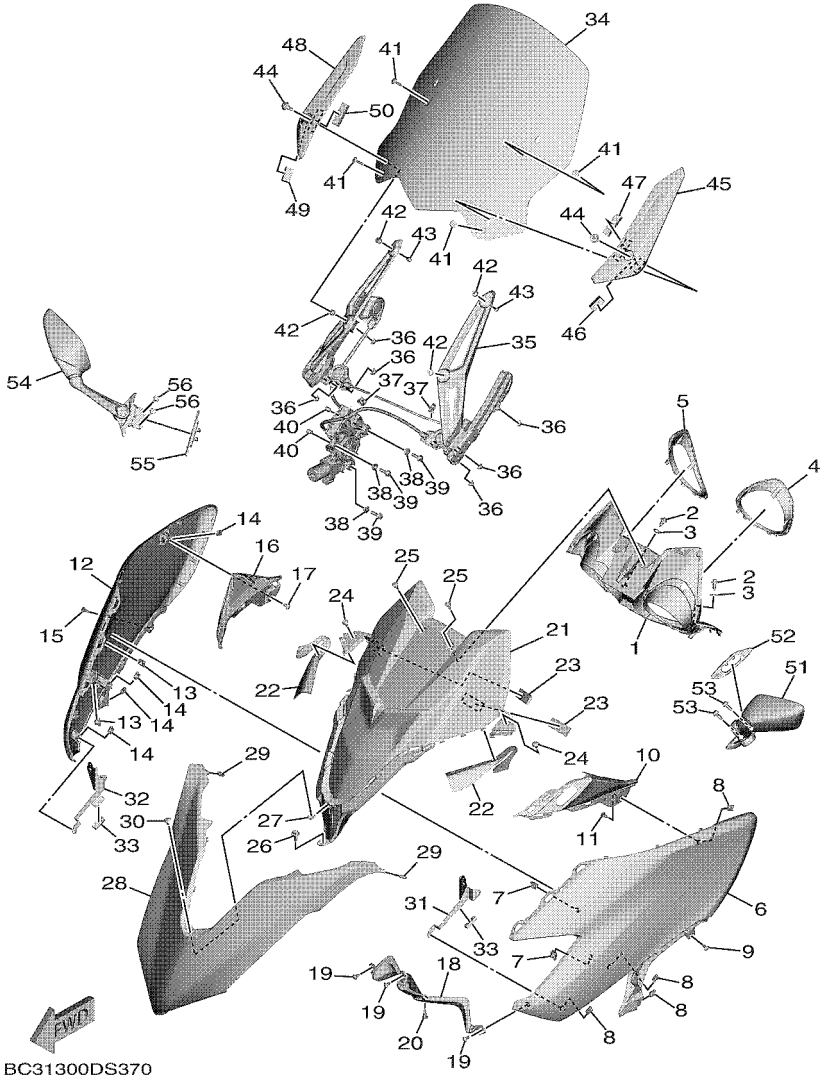

FIG. 37 WINDSHIELD

REF. NO.	PART NO.	DESCRIPTION	B7M1					REMARKS
1	BC3–2836K–00	PANEL, INNER 1	1					
2	90269–07007	RIVET	2					
3	13S–2173M–00	SEAL 3	2					
4	BC3–2331M–A0	COVER, RING	1					
5	BC3–2331N–A0	COVER, RING	1					
6	BC3–28351–00–P7	BODY, COWLING	1					UR FOR MDNMA
	BC3–28351–00–P4	BODY, COWLING	1					UR FOR MDNM8
7	90183–060A6	NUT, SPRING	2					
8	90183–05042	NUT, SPRING	4					
9	97702–50012	SCREW, TAPPING	1					
10	BC3–28306–00	PLATE, WINDSHIELD	1					
11	97702–50012	SCREW, TAPPING	1					
12	BC3–28377–00–P7	BODY, COWLING 2	1					UR FOR MDNMA
	BC3–28377–00–P4	BODY, COWLING 2	1					UR FOR MDNM8
13	90183–060A6	NUT, SPRING	2					
14	90183–05042	NUT, SPRING	4					
15	97702–50012	SCREW, TAPPING	1					
16	BC3–2835P–00	PLATE, WINDSHIELD 2	1					
17	97702–50012	SCREW, TAPPING	1					
18	BC3–22863–00	COVER, UNDER	1					
19	97702–50012	SCREW, TAPPING	3					
20	90269–06008	RIVET	1					
21	BC3–2836L–00	PANEL, INNER 2	1					
22	BC3–21521–00	FLAP, FRONT FENDER	2					
23	BC3–28237–00	DAMPER 3	2					
24	90167–05079	SCREW, TAPPING	2					
25	90269–06008	RIVET	2					

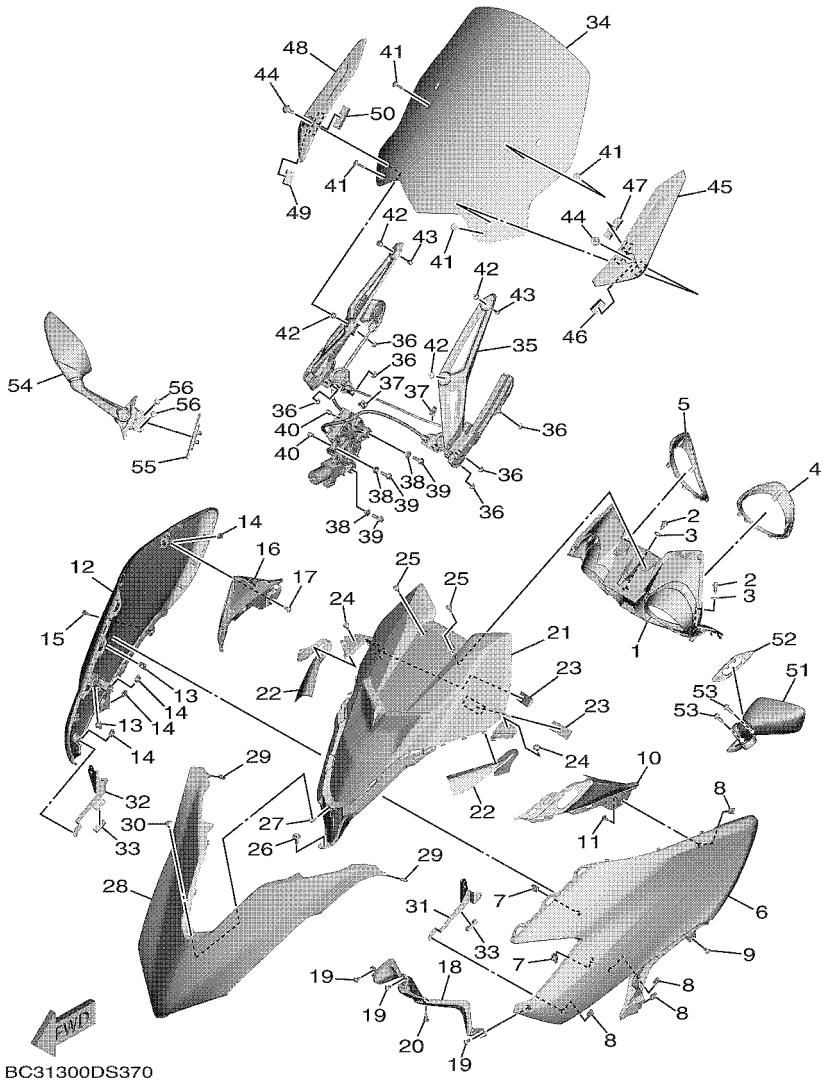

FIG. 37 WINDSHIELD

REF. NO.	PART NO.	DESCRIPTION	B7M1					REMARKS
26	90119–06156	BOLT, WITH WASHER	1					
27	90183–05076	NUT, SPRING	1					
28	BC3–22865–01–P7	COVER, FRONT	1					UR FOR MDNMA
	BC3–22865–01–P4	COVER, FRONT	1					UR FOR MDNM8
29	90183–05076	NUT, SPRING	2					
30	B7M–28331–00	BOLT, LEG SHIELD	1					
31	BC3–28427–00	REINFORCEMENT 1	1					
32	BC3–28437–00	REINFORCEMENT 2	1					
33	5B6–23455–00	DAMPER	2					
34	BC3–2837U–00	SCREEN	1					
35	BC3–83306–00	DRIVE UNIT ASSY	1					
36	95702–06500	NUT, FLANGE	6					
37	90464–12001	CLAMP	2					
38	90387–06107	COLLAR	3					
39	95D32–06020	BOLT, FLANGE DEEP RECESS	3					
40	90445–05003	HOSE	2					
41	90154–05006	SCREW, BINDING	4					
42	90179–05003	NUT	4					
43	BC3–28349–00	CAP	2					
44	90269–08007	RIVET	2					
45	BC3–2842A–00	COVER 5	1					
46	4WV–84345–00	DAMPER, HEADLIGHT	1					
47	JX4–78329–00	SPACER 2	1					
48	BC3–2843C–00	COVER 6	1					
49	4WV–84345–00	DAMPER, HEADLIGHT	1					
50	JX4–78329–00	SPACER 2	1					
51	BC3–26280–00	REAR VIEW MIRROR ASSY (LEFT)	1					

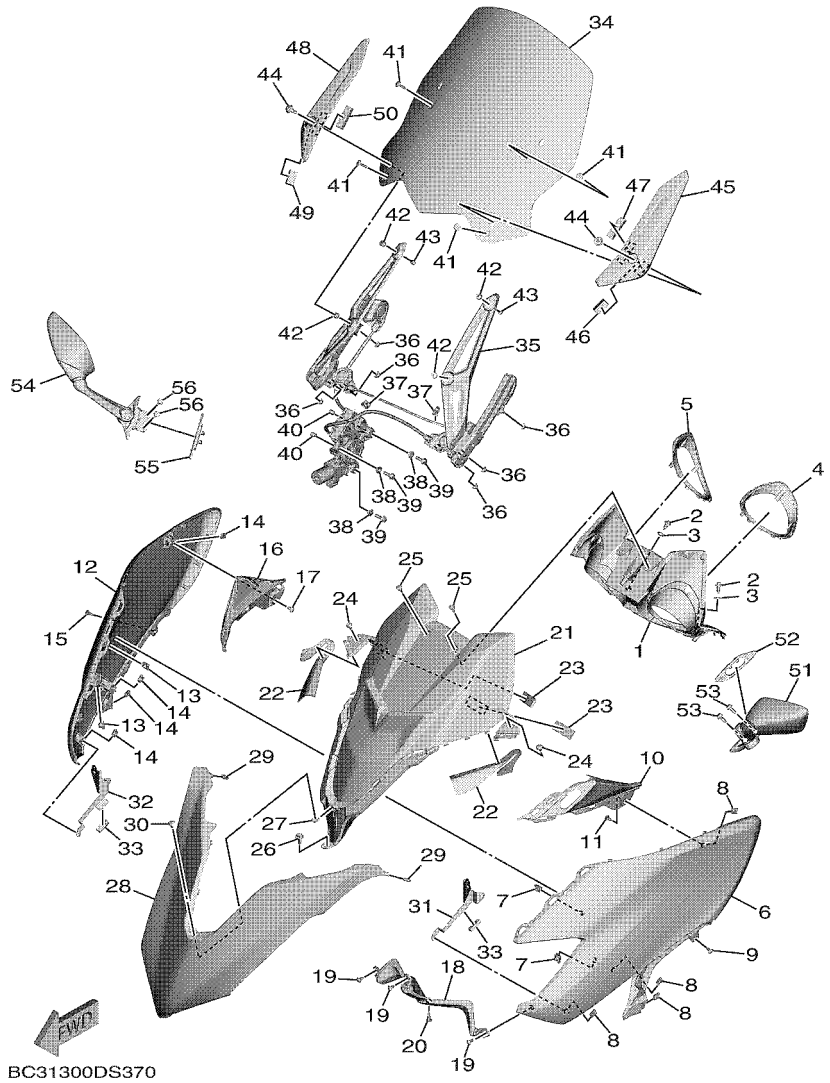

FIG. 37 WINDSHIELD

REF. NO.	PART NO.	DESCRIPTION	B7M1					REMARKS
52	59C–2628N–00	BASE, MIRROR (LEFT)	1					
53	95D32–06016	BOLT, FLANGE DEEP RECESS	2					
54	BC3–26290–00	REAR VIEW MIRROR ASSY (RIGHT)	1					
55	59C–2628R–00	BASE, MIRROR (RIGHT)	1					
56	95D32–06016	BOLT, FLANGE DEEP RECESS	2					

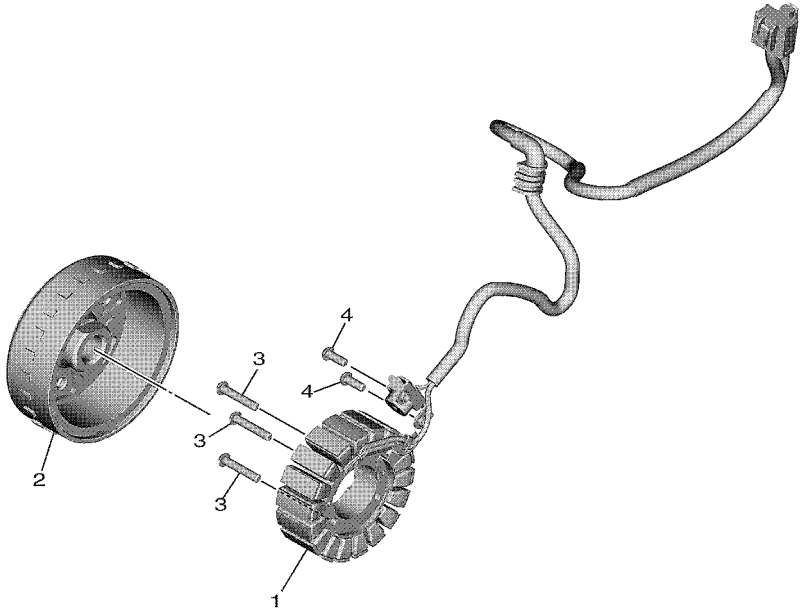

BC31300DS380

FIG. 38 GENERATOR

REF. NO.	PART NO.	DESCRIPTION	B7M1					REMARKS
1	BC3–81410–00	STATOR ASSY	1					
2	B7M–81450–00	ROTOR ASSY	1					
3	90149–06093	SCREW	3					
4	90149–06082	SCREW	2					

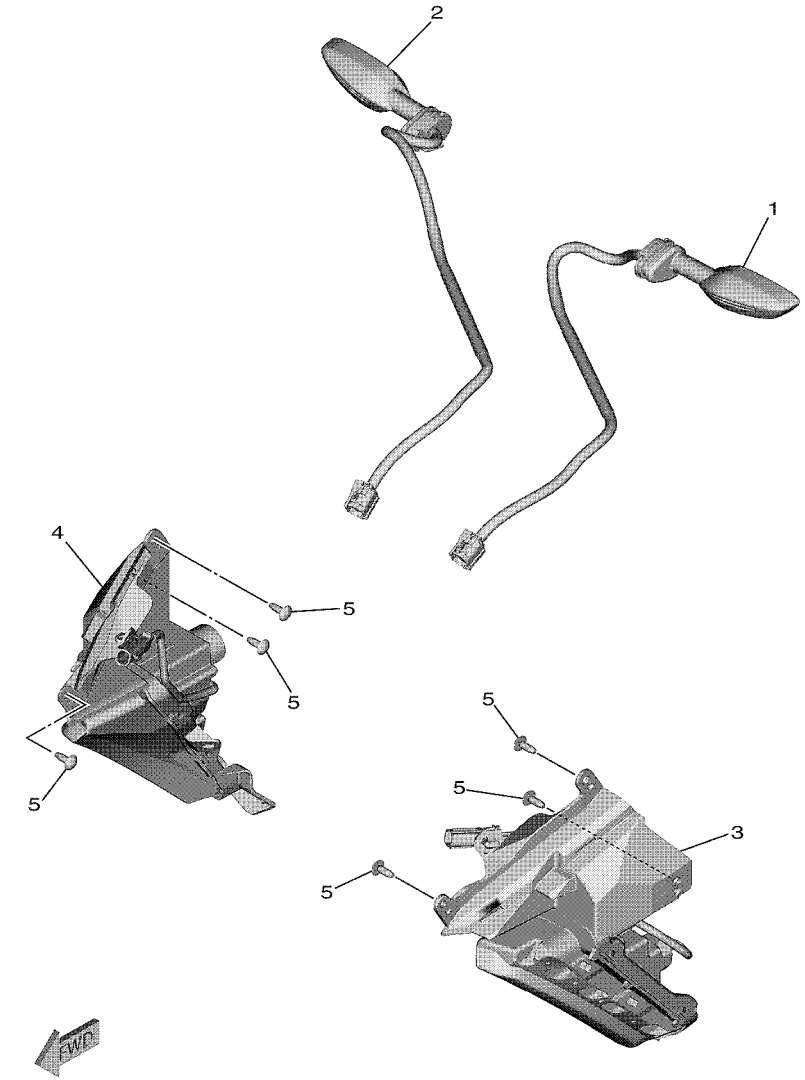

B7M1300DV390

FIG. 39 FLASHER LIGHT

REF. NO.	PART NO.	DESCRIPTION	B7M1					REMARKS
1	BC3–83330–00	REAR FLASHER LIGHT ASSY 1	1					
2	BC3–83340–00	REAR FLASHER LIGHT ASSY 2	1					
3	B7M–83310–00	FRONT FLASHER LIGHT ASSY 1	1					
4	B7M–83320–00	FRONT FLASHER LIGHT ASSY 2	1					
5	97707–50014	SCREW, TRUSS HEAD TAPPING	6					

FIG. 40 METER

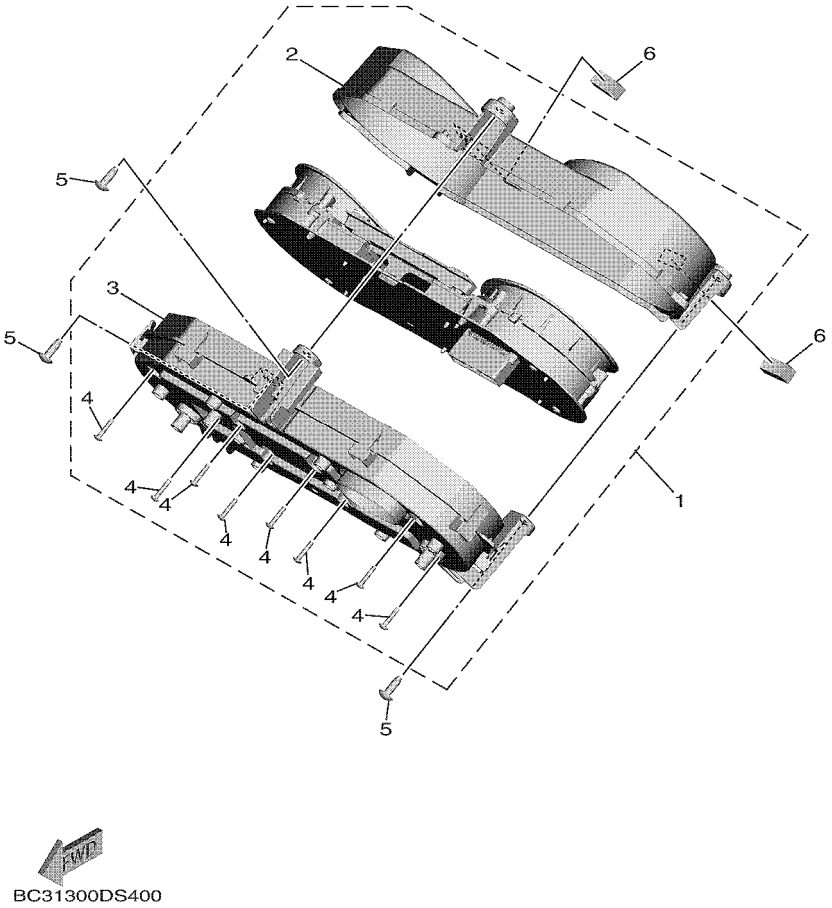

REF. NO.	PART NO.	DESCRIPTION	B7M1					REMARKS
1	B7M–83500–00	METER ASSY (KM/H)	1					UR EXCEPT FOR GBR
	B7M–83500–10	METER ASSY (MPH)	1					UR FOR GBR
2	BC3–83511–01	.LENS, SPEEDOMETER	1					
3	BC3–83572–00	.CASE, SPEEDOMETER LOWER	1					
4	97702–30016	.SCREW,TAPPING	8					
5	97702–50016	SCREW,TAPPING	3					
6	2C0–2847N–00	DAMPER 8	2					

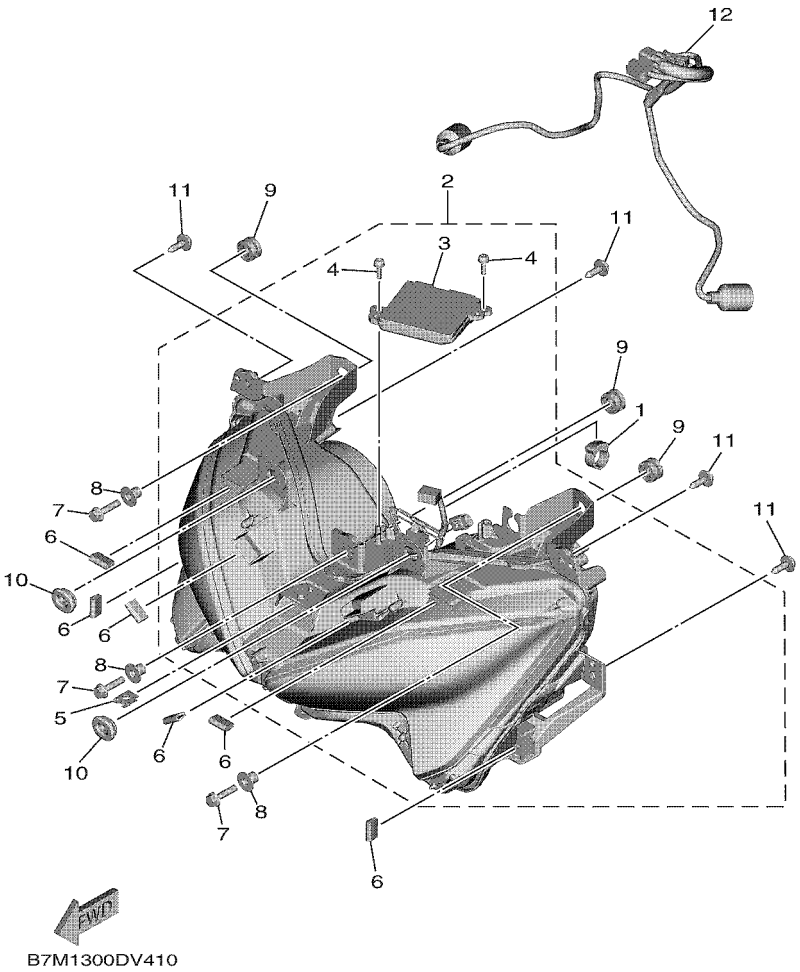

FIG. 41 HEADLIGHT

REF. NO.	PART NO.	DESCRIPTION	B7M1					REMARKS
1	90464–16003	CLAMP	1					
2	B7M–84300–00	HEADLIGHT ASSY	1					
3	B7M–85490–00	.LIGHT CONTROL UNIT	1					
4	2PW–84192–00	.SCREW, SPECIAL	2					
5	90183–06069	NUT, SPRING	1					
6	34B–24785–00	MOLD	6					
7	95D32–06025	BOLT, FLANGE DEEP RECESS	3					
8	90387–06161	COLLAR	3					
9	5PS–83513–00	DAMPER	3					
10	90480–01559	GROMMET	2					
11	90119–06156	BOLT, WITH WASHER	4					
12	B7M–84359–00	CORD, HEADLIGHT	1					

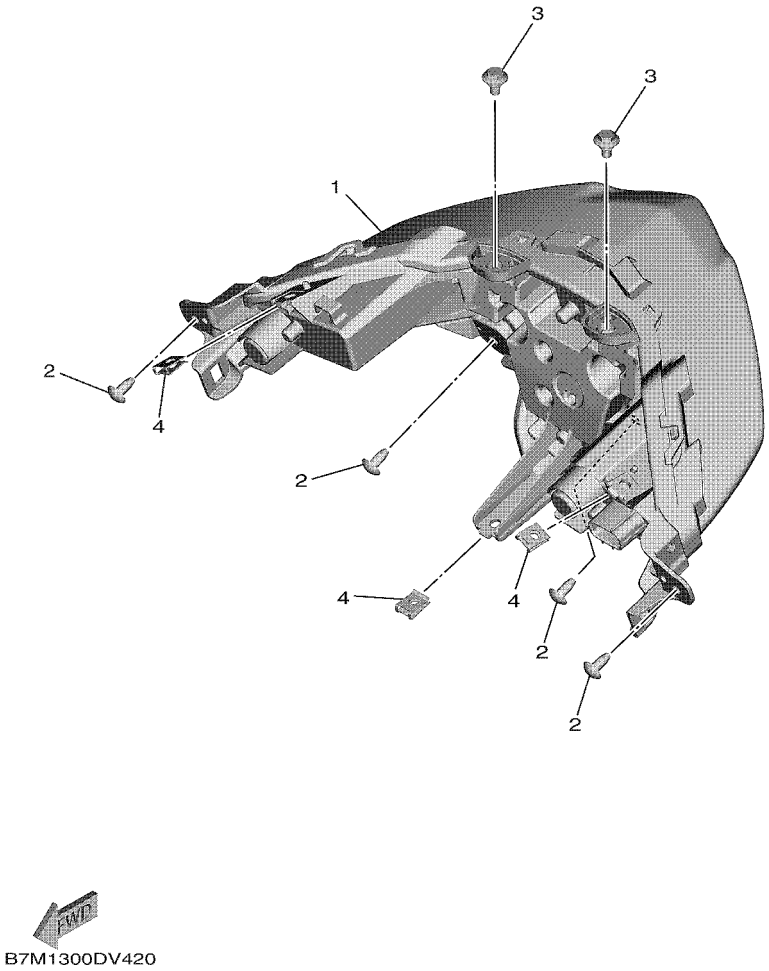

FIG. 42 TAILLIGHT

REF. NO.	PART NO.	DESCRIPTION	B7M1					REMARKS
1	B7M–84710–00	TAILLIGHT UNIT ASSY	1					
2	97702–50012	SCREW, TAPPING	4					
3	90109–05019	BOLT	2					
4	90183–05042	NUT, SPRING	3					

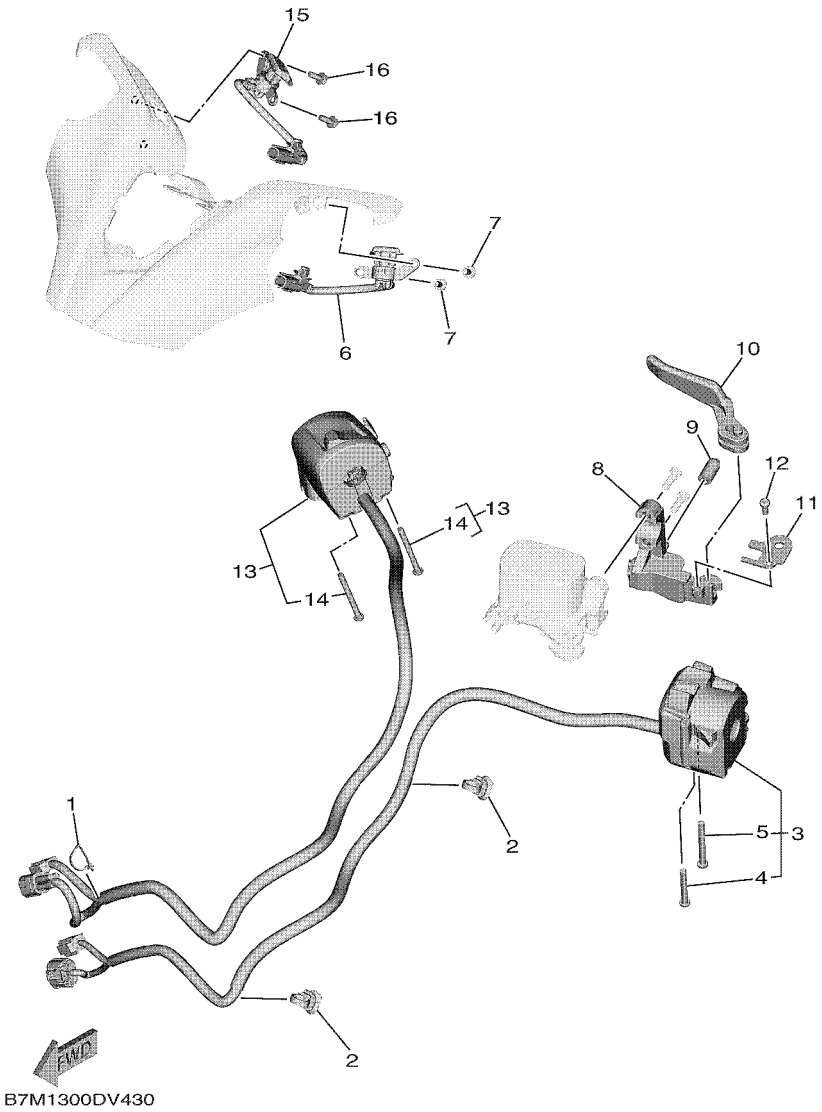

FIG. 43 HANDLE SWITCH & LEVER

REF. NO.	PART NO.	DESCRIPTION	B7M1					REMARKS
1	90465–10098	CLAMP	1					
2	90464–25009	CLAMP	2					
3	BC3–83954–00	SWITCH, HANDLE 7	1					
4	98507–05040	.SCREW, PAN HEAD	1					
5	98507–05055	.SCREW, PAN HEAD	1					
6	B7M–82617–00	SWITCH	1					
7	90105–05025	BOLT, FLANGE	2					
8	BC3–26396–00	HOLDER, ADJUSTING	1					
9	5RB–13569–00	PLUG, BLIND	1					
10	5VU–83930–00	LEVER LOCK ASSY	1					
11	BC3–25727–00	BRACKET, LEVER	1					
12	98507–05012	SCREW, PAN HEAD	1					
13	BC3–83972–11	SWITCH, HANDLE 4	1					
14	98507–05050	.SCREW, PAN HEAD	2					
15	BC3–82627–00	SWITCH	1					
16	90105–05025	BOLT, FLANGE	2					

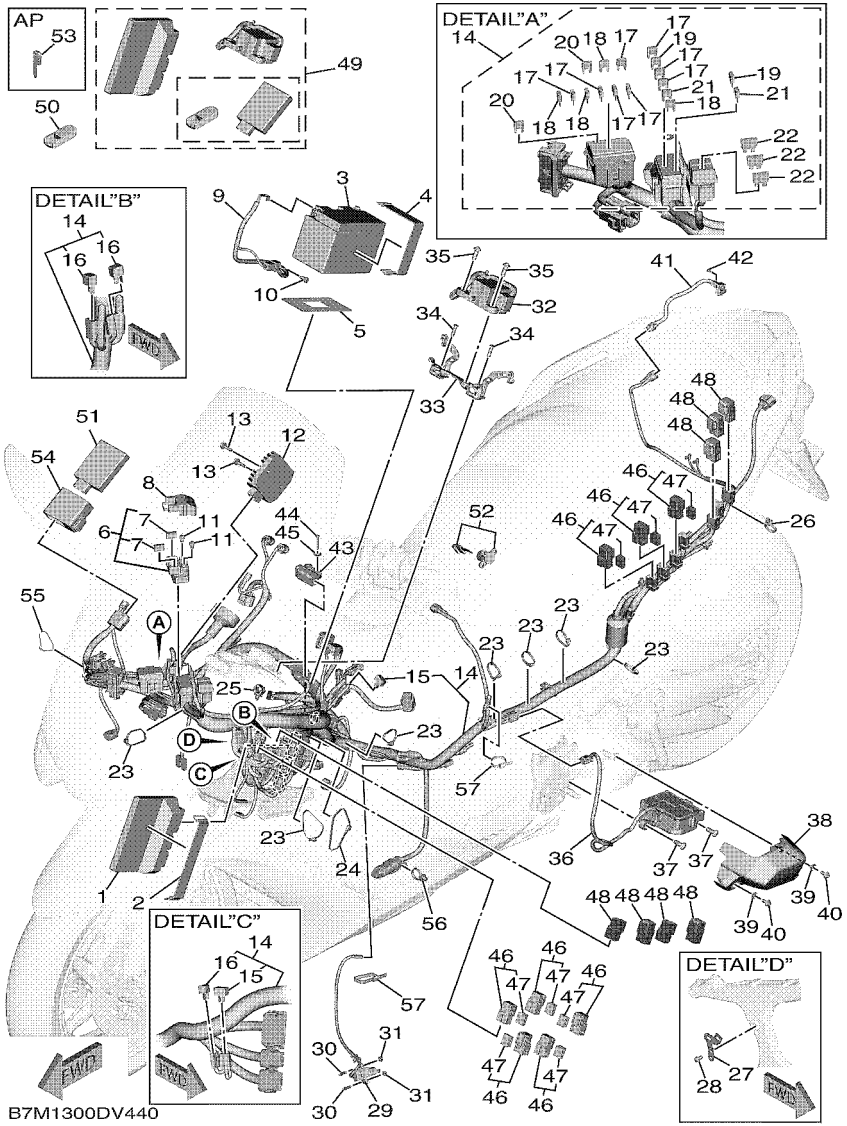

FIG. 44 ELECTRICAL 1

REF. NO.	PART NO.	DESCRIPTION	B7M1					REMARKS
1	B7M–8591A–00	ENGINE CONTROL UNIT ASSY	1					
2	137–82131–01	BAND, BATTERY	1					
3	23P–82100–00	BATTERY ASSY (GS YUASA YTZ12S)	1					
4	137–82131–01	BAND, BATTERY	1					
5	BC3–82121–00	PAD, BATTERY	1					
6	BC3–81940–00	STARTER RELAY ASSY	1					
7	5EA–82151–00	.FUSE (40A-BL)	2					
8	5SL–82119–10	COVER, LEAD WIRE	1					
9	BC3–82116–00	WIRE, MINUS LEAD	1					
10	91380–06012	BOLT	1					
11	95022–06008	BOLT, FLANGE	2					
12	5VX–81960–00	RECTIFIER & REGULATOR ASSY	1					
13	95D32–06020	BOLT, FLANGE DEEP RECESS	2					
14	B7M–82590–00	WIRE HARNESS ASSY	1					
15	4WA–81980–00	.DIODE ASSY	2					
16	3WP–81980–00	.DIODE ASSY	3					
17	5JJ–82151–00	.FUSE (7.5A-BL)	8					
18	5JJ–82151–10	.FUSE (15A-BL)	4					
19	5JJ–82151–80	.FUSE (2A-BL)	2					
20	5JJ–82151–20	.FUSE (20A-BL)	2					
21	5JJ–82151–60	.FUSE (30A-BL)	2					
22	1MC–82151–00	.FUSE (1A-BL)	3					
23	1UA–82591–00	BAND	7					
24	3MA–82591–00	BAND	1					
25	90464–30010	CLAMP	1					
26	90464–12018	CLAMP	1					
27	B7M–1244F–00	BRACKET 2	1					

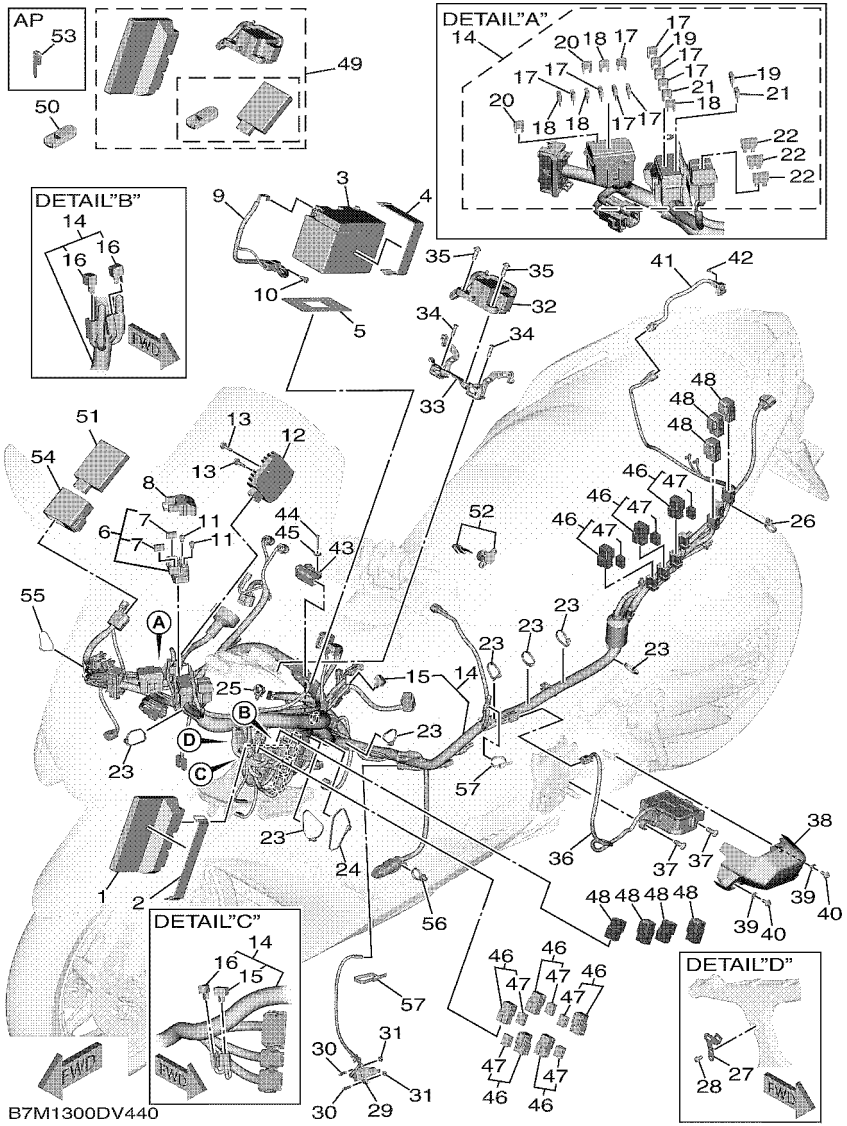

FIG. 44 ELECTRICAL 1

REF. NO.	PART NO.	DESCRIPTION	B7M1					REMARKS
28	95022–06010	BOLT, FLANGE	1					
29	BC3–82566–00	SWITCH, SIDE STAND	1					
30	92012–05020	BOLT, BUTTON HEAD	2					
31	95602–05200	NUT, SELF-LOCKING	2					
32	BC3–23480–00	STEERING LOCK ASSY	1					
33	BC3–2137F–00	STAY 1	1					
34	90109–060G4	BOLT	2					
35	90109–08261	BOLT	2					
36	BC3–27180–01	LOCK ASSY	1					
37	90109–08261	BOLT	2					
38	BC3–8252U–00	COVER	1					
39	90387–06130	COLLAR	2					
40	90111–06092	BOLT,HEX. SOCKET BUTTON	2					
41	59C–81860–01	SWITCH ASSY	1					
42	98902–03008	SCREW, BIND	1					
43	5PS–82576–01	SENSOR, LEAN ANGLE	1					
44	91312–04025	BOLT, HEXAGON SOCKET HEAD	2					
45	90201–04325	WASHER, PLATE	2					
46	1ST–81950–00	RELAY ASSY (1ST-00)	8					
47	5JJ–81952–00	.HOLDER, RELAY	1					
48	5JJ–81950–11	RELAY ASSY (G8HN-1C4T-DJ-Y51)	7					
49	B7M–W862A–00	REMOTE CONTROL UNIT SET	1					
50	B7M–86261–00	XMTR. COMP.	1					
51	B7M–86265–00	RECEIVER COMPLETE	1					
52	2DF–82021–00	KEY SET	1					
53	2DF–82511–09	BLANK KEY	1					AP
54	2PW–85546–00	BAND	1					

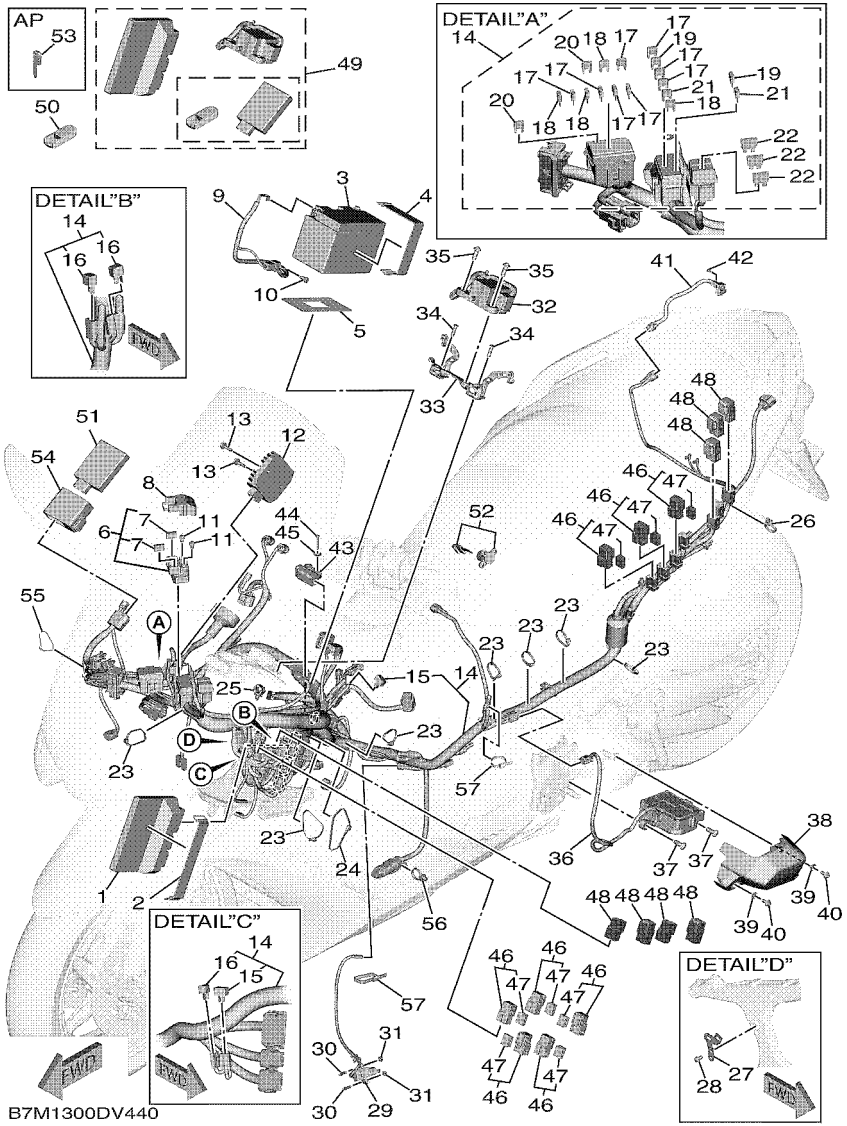

FIG. 44 ELECTRICAL 1

REF. NO.	PART NO.	DESCRIPTION	B7M1					REMARKS
55	5Y9–12491–00	CLAMP 1	1					
56	90464–30011	CLAMP	1					
57	90464–13073	CLAMP	2					(125.0x7.0)

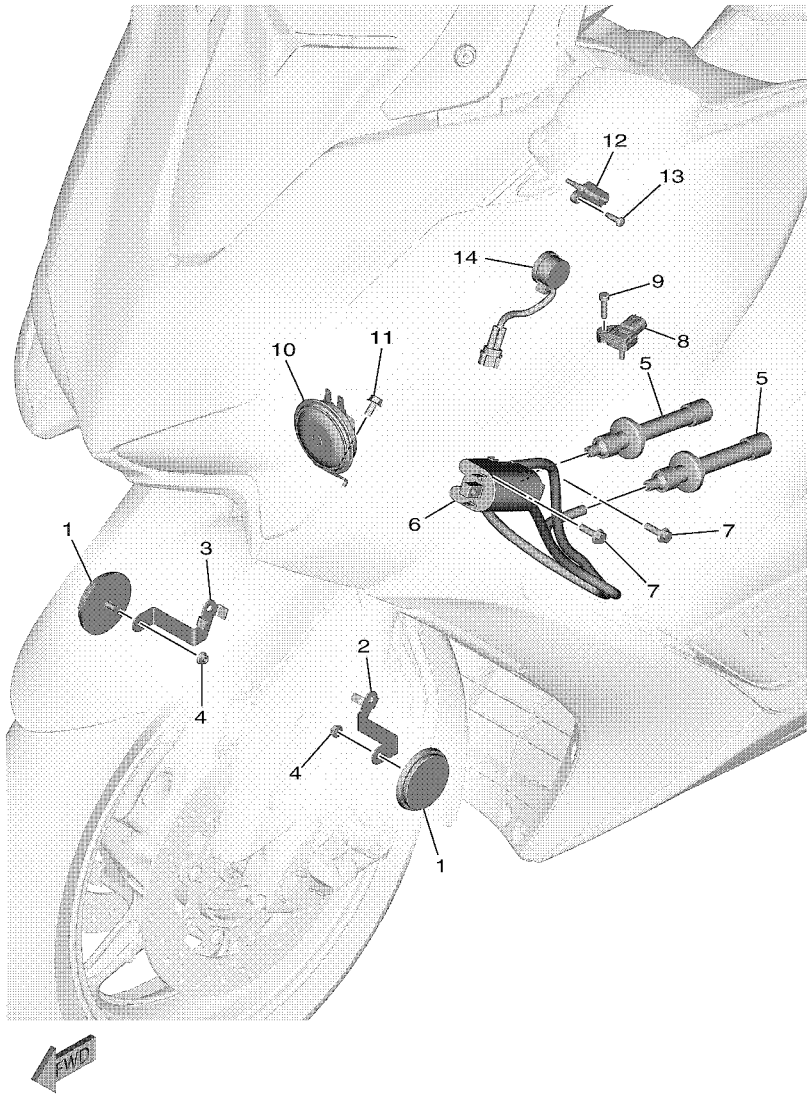

B7M1300DV450

FIG. 45 ELECTRICAL 2

REF. NO.	PART NO.	DESCRIPTION	B7M1					REMARKS
1	59C–85131–00	REFLECTOR, REAR 1	2					
2	2PW–85112–00	BRACKET, REFLECTOR 1	1					
3	2PW–85122–00	BRACKET, REFLECTOR 2	1					
4	95702–05500	NUT, FLANGE	2					
5	B7M–82370–00	PLUG CAP ASSY	2					
6	BC3–82310–01	IGNITION COIL ASSY	1					
7	95D32–06020	BOLT, FLANGE DEEP RECESS	2					
8	1WS–82380–00	SENSOR, PRESSURE	1					
9	91312–05020	BOLT, HEXAGON SOCKET HEAD	1					
10	BC3–83371–10	HORN	1					
11	95D32–06012	BOLT, FLANGE DEEP RECESS	1					
12	5YU–85886–00	SENSOR, AIR TEMPERATURE	1					
13	97702–50516	SCREW, TAPPING	1					
14	BC3–83383–00	BUZZER	1					

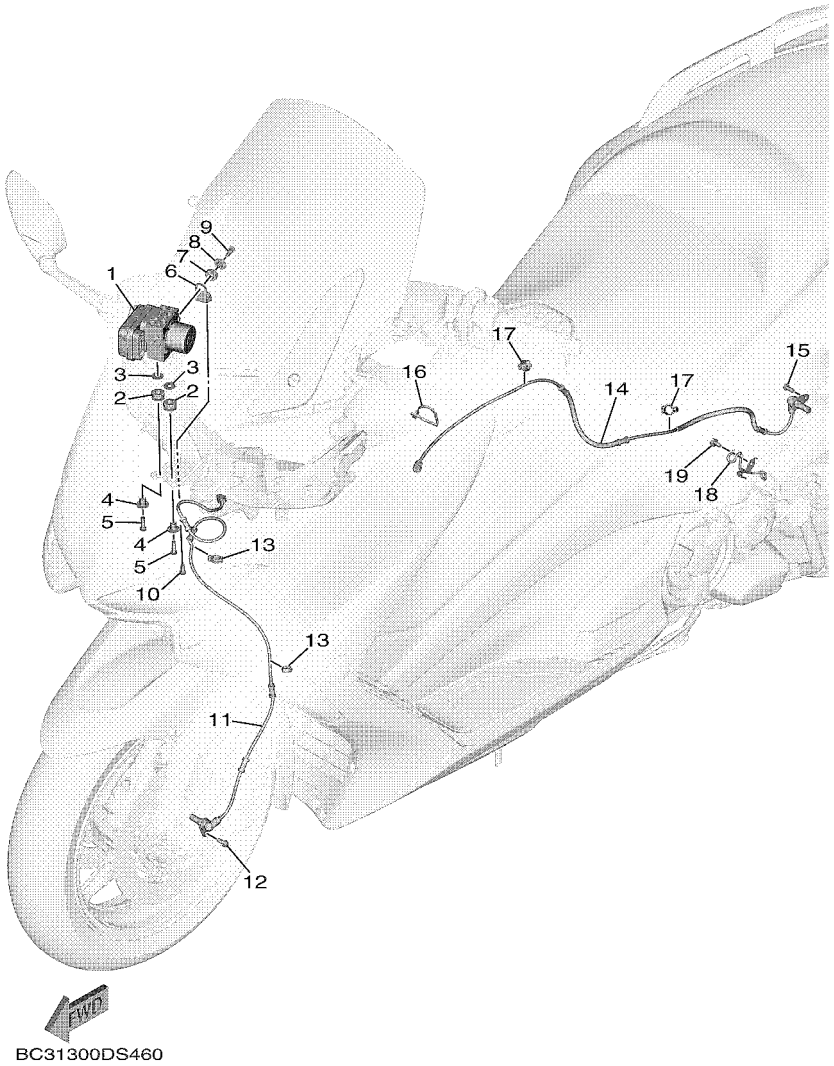

FIG. 46 ELECTRICAL 3

REF. NO.	PART NO.	DESCRIPTION	B7M1					REMARKS
1	B7M–85930–09	HYDRAULIC UNIT ASSY	1					
2	90480–13033	GROMMET	2					
3	90201–06118	WASHER, PLATE	2					
4	90387–06324	COLLAR	2					
5	92012–06020	BOLT, BUTTON HEAD	2					
6	BC3–85991–00	BRACKET, UNIT	1					
7	90480–13032	GROMMET	1					
8	90387–06323	COLLAR	1					
9	92012–06016	BOLT, BUTTON HEAD	1					
10	92012–06012	BOLT, BUTTON HEAD	1					
11	BC3–85970–00	WHEEL SENSOR ASSY, FRONT	1					
12	95022–06014	BOLT, FLANGE	1					
13	90464–12013	CLAMP	2					
14	BC3–85980–00	WHEEL SENSOR ASSY, REAR	1					
15	95022–06014	BOLT, FLANGE	1					
16	90465–10098	CLAMP	1					
17	90464–14003	CLAMP	2					
18	BC3–8431U–00	HOLDER	1					
19	95D32–06012	BOLT, FLANGE DEEP RECESS	1					

PART NO.	REF. NO.
B7M–11101–09	1 – 1
5NL–11133–10	1 – 2
B7M–11166–00	8 – 11
B7M–11181–00	1 – 16
B7M–11190–00	1 – 17
B7M–11193–00	1 – 18
214–11198–01	11 – 8
B7M–11310–09	1 – 20
59C–11312–00	2 – 19
59C–11351–00	1 – 21
B7M–11400–01	2 – 1
B7M–11416–00	2 – 10
B7M–11416–10	2 – 10
B7M–11416–20	2 – 10
B7M–11416–30	2 – 10
B7M–11416–40	2 – 10
B7M–11416–A0	2 – 10
B7M–11417–00	2 – 11
B7M–11417–10	2 – 11
B7M–11417–20	2 – 11
B7M–11417–30	2 – 11
B7M–11417–40	2 – 11
B7M–11417–A0	2 – 11
5GJ–11455–10	2 – 17
B7M–11603–00	2 – 13
B7M–11631–00	2 – 12
B7M–11633–00	2 – 14
BC3–11642–01–A0	2 – 16
B7M–11650–00	2 – 2
5VU–11654–00	2 – 3
4X7–11654–01	2 – 7
B7M–11656–00	2 – 5
	2 – 9
B7M–11656–10	2 – 5
	2 – 9
B7M–11656–20	2 – 5
	2 – 9
B7M–11656–30	2 – 5
	2 – 9
59C–11660–10	2 – 6
B7M–12111–00	3 – 1
59C–12113–00	3 – 4
3TJ–12117–00	3 – 5
1HX–12118–00	3 – 6
4TV–12119–00	3 – 7
59C–12121–01	3 – 2
8GC–12126–00	3 – 3
B7M–12153–09	3 – 9

PART NO.	REF. NO.
B7M–12153–10	3 – 9
1HX–12168–00	3 – 8
1HX–12168–20	3 – 8
1HX–12168–40	3 – 8
1HX–12168–60	3 – 8
1HX–12168–80	3 – 8
1HX–12168–A0	3 – 8
1HX–12168–F0	3 – 8
1HX–12168–H1	3 – 8
1HX–12168–K1	3 – 8
1HX–12168–M1	3 – 8
1HX–12168–R1	3 – 8
1HX–12168–U1	3 – 8
1HX–12168–W1	3 – 8
1HX–12168–Y1	3 – 8
1HX–12169–11	3 – 8
1HX–12169–31	3 – 8
1HX–12169–50	3 – 8
1HX–12169–70	3 – 8
1HX–12169–90	3 – 8
1HX–12169–E0	3 – 8
1HX–12169–G0	3 – 8
1HX–12169–J0	3 – 8
1HX–12169–L0	3 – 8
1HX–12169–N0	3 – 8
1HX–12169–T0	3 – 8
B7M–12170–00	4 – 1
B7M–12180–00	4 – 2
B7M–12210–00	4 – 4
15B–12213–00	4 – 5
59C–12251–00	4 – 7
B7M–12252–00	4 – 8
BC3–12405–00	6 – 8
1WS–12410–00	6 – 2
B7M–12413–00	6 – 3
59C–12420–10	5 – 1
5VU–12421–00	5 – 2
5GJ–12422–02	5 – 7
59C–12437–00	5 – 13
5VK–12438–00	5 – 5
1WG–12439–00	5 – 8
B7M–1243A–00	6 – 24
B7M–1243E–00	6 – 25
BC3–1244E–00	6 – 21
B7M–1244F–00	44 – 27
20S–12450–00	5 – 6
B7M–12461–00	6 – 6
5SL–12462–00	6 – 19

PART NO.	REF. NO.
BC3–12476–00	6 – 16
BC3–12477–00	6 – 17
5VU–12478–00	6 – 7
B7M–12481–00	5 – 14
B7M–12482–00	5 – 15
B7M–12483–00	6 – 5
5Y9–12491–00	44 – 55
B7M–12551–00	6 – 29
BC3–12589–00	6 – 28
5GJ–12591–00	6 – 20
5SL–12671–00	6 – 10
2S3–12675–00	6 – 9
3LD–13113–00	7 – 14
5GJ–13161–00	7 – 3
59C–13300–00	7 – 1
5GJ–13405–00	7 – 8
5GJ–13410–00	7 – 10
22F–13411–01	7 – 13
5GH–13440–61	7 – 20
B7M–13470–00	7 – 17
1XD–13475–00	7 – 18
5GJ–13475–00	7 – 6
4G0–13490–01	7 – 21
B7M–13542–00	9 – 14
8FP–13556–00	9 – 2
5RB–13569–00	43 – 9
8GL–13571–00	9 – 7
8HG–13573–00	9 – 6
B7M–13635–00	9 – 17
B7M–13750–00	9 – 1
B7M–13758–00	25 – 37
1WS–13761–00	9 – 3
BC3–13907–02	25 – 8
B7M–13938–00	9 – 5
B7M–13971–01	25 – 32
2C0–14105–00	9 – 11
8A7–14139–00	9 – 13
5PS–14147–00	9 – 4
895–14169–00	9 – 12
1MC–14216–00	23 – 19
5FL–14216–00	23 – 17
8CC–14216–10	9 – 10
B7M–14409–00	8 – 18
B7M–14411–00	8 – 1
B7M–14412–00	8 – 2
B7M–1441A–00	8 – 5
B7M–14435–00	9 – 15
BC3–14437–00	8 – 8

PART NO.	REF. NO.
BC3–1443A–00	8 – 9
5XT–1443E–00	8 – 13
B7M–14451–00	8 – 10
48U–14452–00	13 – 25
B7M–14452–00	8 – 3
B7M–14465–00	25 – 34
B7M–14469–00	8 – 6
B7M–1446C–00	8 – 7
8HG–14534–00	9 – 8
4BR–14613–00	10 – 22
BC3–14629–00	10 – 9
B7M–14648–00	10 – 21
B7M–1465T–00	10 – 2
B7M–14703–00	10 – 1
BC3–14718–00	10 – 11
BC3–14738–00	10 – 29
B7M–1475P–00	10 – 30
B7M–1476P–00	10 – 31
B7M–14799–00	10 – 7
B7M–15100–09	11 – 1
5GJ–15113–00	13 – 9
36Y–15189–00	12 – 9
4H7–15189–00	11 – 10
15B–15191–00	13 – 7
BC3–15316–00	12 – 19
59C–15326–10	13 – 26
BC3–15335–00	12 – 20
2H7–15361–00	12 – 2
5GJ–15363–10	12 – 14
4XM–15383–00	16 – 11
5GJ–15383–00	16 – 29
B7M–15407–00	13 – 1
59C–15408–00	13 – 24
59C–15411–10	12 – 1
59C–15414–00	12 – 3
BC3–15415–00	12 – 16
5GJ–15417–00	12 – 4
59C–15421–10	13 – 11
BC3–15423–00	13 – 22
5GJ–1542A–00	13 – 20
BC3–1542B–00	13 – 27
59C–15431–00	13 – 8
BC3–1543A–00	13 – 30
B7M–15451–00	12 – 11
5GJ–15453–01	12 – 6
59C–15461–00	13 – 12
BC3–15473–00	13 – 3
5GJ–15474–00	13 – 6

PART NO.	REF. NO.
15B–15481–00	11 – 7
2PW–15481–01	12 – 18
	13 – 21
	13 – 28
	13 – 32
5GJ–15486–00	12 – 17
4B5–15492–00	13 – 19
BC3–15499–00	12 – 21
	13 – 29
B7M–15512–00	14 – 1
B7M–15517–00	14 – 4
36Y–15521–01	14 – 2
1WS–15590–00	14 – 3
59C–15768–00	13 – 16
BC3–15789–00	12 – 22
	13 – 31
B7M–16110–00	15 – 1
59C–16151–00	17 – 2
B7M–16321–00	15 – 11
B7M–16324–00	15 – 13
B7M–16325–00	15 – 12
5GJ–16334–00	15 – 16
B7M–16371–00	15 – 5
B7M–16511–00	15 – 7
5GJ–16520–00	15 – 9
5GJ–16529–00	15 – 18
5GJ–16533–00	15 – 10
5GJ–16537–00	15 – 17
5GJ–16537–10	15 – 17
5GJ–16537–20	15 – 17
5GJ–16537–30	15 – 17
5GJ–16540–00	15 – 8
5GJ–16550–00	15 – 15
B7M–17111–00	17 – 3
B7M–17211–00	17 – 7
59C–17411–10	17 – 1
B7M–17421–00	17 – 5
15B–17524–00	22 – 1
5GJ–17554–00	22 – 6
B7M–17601–09	16 – 1
59C–17611–00	16 – 7
BC3–17623–00	16 – 4
5VU–17632–10	16 – 3
B7M–17641–00	16 – 6
4WV–17644–00	16 – 21
59C–17649–01	16 – 8
B7M–17651–00	22 – 17
59C–17653–00	16 – 5

PART NO.	REF. NO.
59C–17660–00	16 – 14
4CW–17664–00	16 – 18
59C–17670–00	16 – 15
B7M–17681–00	16 – 24
5GJ–17690–00	16 – 20
B7M–21110–00	18 – 1
BC3–2113B–00	18 – 5
BC3–2116M–00	18 – 45
BC3–2117F–00	18 – 47
BC3–2117K–00	27 – 26
BC3–2117M–00	18 – 48
BC3–21185–00	18 – 10
BC3–21195–00	18 – 9
BC3–21236–00	18 – 2
5VX–21279–10	18 – 4
B7M–21345–00	25 – 12
BC3–2137F–00	44 – 33
B7M–2139X–00	18 – 32
BC3–2141A–00	18 – 50
BC3–2141E–00	18 – 52
BC3–2142K–00	18 – 18
BC3–21445–00	18 – 14
BC3–2144H–00	18 – 54
BC3–2145H–00	18 – 56
BC3–21481–00	18 – 6
2PW–21511–00–P9	19 – 1
2PW–21511–00–PC	19 – 1
2PW–21513–00	19 – 4
2PW–21514–00	19 – 7
BC3–21521–00	37 – 22
BC3–21553–00	36 – 8
2PW–21556–00	19 – 10
B7M–21557–00	36 – 2
26P–21568–00	36 – 1
BC3–2161G–00	20 – 50
BC3–21629–00	20 – 40
BC3–21668–00	27 – 28
BC3–21669–00	20 – 53
BC3–21671–00	20 – 49
BC3–21682–00	22 – 34
B7M–21711–00–P1	20 – 9
B7M–21711–00–P2	20 – 9
B7M–2171A–00	20 – 22
B7M–2171E–00	20 – 1
BC3–2171L–00–P4	20 – 34
BC3–2171L–00–P6	20 – 34
BC3–2171M–00–P4	20 – 37
BC3–2171M–00–P6	20 – 37

PART NO.	REF. NO.
B7M–2171N–00	21 – 35
B7M–2171R–00	21 – 41
B7M–21721–00–P1	20 – 15
B7M–21721–00–P2	20 – 15
B7M–2172G–00	20 – 12
B7M–2172H–00	20 – 18
B7M–2172K–00	21 – 5
B7M–2172N–00	21 – 8
B7M–21731–00–P0	20 – 26
B7M–21731–00–P1	20 – 26
5GJ–2173B–61	20 – 55
	20 – 56
13S–2173M–00	37 – 3
BC3–2173M–00	27 – 5
B7M–21741–00–P0	20 – 30
B7M–21741–00–P1	20 – 30
5EA–2174Y–00	36 – 12
4JP–21753–00	25 – 15
B7M–2175N–00	20 – 25
B7M–2175T–00	21 – 47
B7M–2175U–00	21 – 50
BC3–21773–00	20 – 46
3XV–21778–00	36 – 3
BC3–2177B–00	20 – 7
BC3–2178J–00	21 – 10
BC3–2178V–00	21 – 11
1AA–21815–00	21 – 29
B7M–21816–00	21 – 31
BC3–21817–00	21 – 32
BC3–21871–00	21 – 25
1AA–21874–00	21 – 30
BC3–2210M–00	22 – 5
BC3–2210N–01	22 – 11
15B–22141–00	22 – 24
1J7–22143–00	22 – 26
59C–2214F–00	22 – 19
BC3–2217A–00	22 – 52
BC3–2217M–00	22 – 51
59C–2219X–00	22 – 18
B7M–22210–00	22 – 67
BC3–22311–00	22 – 40
BC3–22312–00	22 – 43
BC3–22381–00	22 – 46
BC3–22465–00	22 – 14
BC3–2247A–00	34 – 17
BC3–2248B–00	22 – 53
BC3–2248B–10	22 – 65
BC3–2248C–00	22 – 54

PART NO.	REF. NO.
BC3–22863–00	37 – 18
BC3–22865–01–P4	37 – 28
BC3–22865–01–P7	37 – 28
BC3–22882–00	22 – 66
B7M–23102–00	24 – 19
B7M–23103–00	24 – 1
BC3–23110–00	24 – 2
2PW–23111–00	24 – 16
	24 – 34
5VY–23118–00	24 – 15
	24 – 33
BC3–23120–00	24 – 20
5PB–23123–00	24 – 41
1RC–23125–00	24 – 7
	24 – 25
BC3–23126–00	24 – 9
	24 – 27
B7M–23141–00	24 – 14
	24 – 32
4EB–23144–00	24 – 3
	24 – 21
4EB–23145–01	24 – 5
	24 – 23
36Y–23146–10	24 – 6
	24 – 24
39P–23147–00	24 – 17
	24 – 35
26H–23156–00	24 – 4
	24 – 22
509–23158–L0	24 – 11
	24 – 29
B7M–23170–00	24 – 10
B7M–23170–10	24 – 28
4FM–23171–40	24 – 8
	24 – 26
BC3–2317E–00	24 – 42
BC3–2317F–00	24 – 44
278–23181–50	24 – 12
	24 – 30
BC3–2331M–A0	37 – 4
BC3–2331N–A0	37 – 5
BC3–23340–00	24 – 37
BC3–2334G–00	23 – 23
BC3–2334H–00	23 – 10
3LC–23357–00	24 – 13
	24 – 31
4XV–23415–01	23 – 5
4XV–23418–00	23 – 2

PART NO.	REF. NO.
2PW–23441–00	23 – 21
59C–23442–01	23 – 9
5B6–23455–00	37 – 33
3FV–23462–00	24 – 40
BC3–23480–00	44 – 32
BC3–23857–00	23 – 24
BC3–24110–00	25 – 1
BC3–24129–A0	21 – 17
BC3–24139–A0	21 – 19
1RC–2413B–01	36 – 43
	36 – 47
B7M–2414A–00	25 – 14
5PW–2415E–01	21 – 54
BC3–24170–00	25 – 25
5RB–24180–00	25 – 18
22W–24181–00	10 – 16
BC3–24182–00	25 – 6
BC3–24183–00	25 – 24
BC3–24184–00	25 – 22
BC3–24185–00	25 – 7
BC3–2419F–00	25 – 23
BC3–24313–00	25 – 17
B7M–24315–00	25 – 29
5EL–24316–10	25 – 27
BC3–24318–00	25 – 16
BC3–24339–00	25 – 4
1S4–24486–00	25 – 10
BC3–24491–00	25 – 9
BC3–24610–01	25 – 2
B7M–24624–00	21 – 13
2PW–24718–00	26 – 12
2PW–24726–00	26 – 6
2PW–24727–00	26 – 7
BC3–24730–12	26 – 1
BC3–24730–32	26 – 1
BC3–24731–12	26 – 2
BC3–24731–32	26 – 2
BC3–24738–00	26 – 3
BC3–2473R–00	27 – 1
BC3–24747–00	27 – 10
BC3–24748–00	26 – 4
BC3–2474A–00–P4	27 – 11
BC3–2474A–00–P6	27 – 11
4B5–2474E–00	26 – 9
BC3–2474W–00–P4	27 – 15
BC3–2474W–00–P6	27 – 15
B7M–2475U–00	26 – 16
BC3–24765–00	21 – 1

PART NO.	REF. NO.
B7M–24769–00	26 – 14
4B5–2476U–00	27 – 13
	27 – 17
B7M–2476U–00	25 – 33
B7M–24776–00	21 – 7
B7M–2477F–00	21 – 6
BC3–24780–00	27 – 19
34B–24785–00	41 – 6
BC3–2478D–00	27 – 21
4B5–2478G–04	26 – 17
BC3–24796–00	21 – 23
5EA–25117–00	28 – 2
2PW–25168–00–8L	28 – 1
2PW–25168–00–P1	28 – 1
2DR–2517G–00	28 – 5
2PW–2517G–00	30 – 7
BC3–25181–00	28 – 10
5PW–25188–00	28 – 11
59C–25317–01	30 – 4
59C–25333–00	31 – 26
BC3–25338–00–8L	30 – 1
BC3–25338–00–P0	30 – 1
BC3–25376–00	30 – 17
2PW–25377–10	30 – 18
2PW–2537A–00	30 – 16
BC3–25381–00	30 – 19
5VY–25388–00	22 – 38
5VY–25389–01	22 – 39
23P–25398–00	28 – 9
	30 – 11
BC3–25470–00	30 – 12
BC3–25727–00	43 – 11
4SV–25802–00	29 – 6
	29 – 17
59C–25802–00	31 – 4
4SV–25802–10	29 – 4
	29 – 15
59C–25802–50	31 – 14
59C–25803–00	31 – 5
3GM–25803–10	29 – 5
	29 – 16
3MA–25803–10	29 – 7
	29 – 18
4B5–25805–00	29 – 8
	29 – 19
59C–25805–50	31 – 15
59C–25806–00	31 – 8
BC3–25807–00	33 – 2

PART NO.	REF. NO.
BC3–25807–10	33 – 31
BC3–2580A–00	33 – 1
BC3–2580A–10	33 – 30
2PW–2580T–20	29 – 3
2PW–2580U–30	29 – 14
59C–2580W–00	31 – 3
59C–2581T–00	29 – 1
1J3–25824–00	29 – 12
5GM–25824–00	31 – 10
5VS–25824–00	29 – 23
1D7–25825–00	31 – 11
59C–25825–00	31 – 25
306–25825–01	29 – 13
	29 – 24
59C–2582W–00	31 – 1
59C–25838–00	31 – 19
BC3–2584B–00	33 – 42
B7M–2584C–00	33 – 43
BC3–2584D–00	33 – 26
4B5–25852–00	33 – 3
	33 – 32
4B5–25854–00	33 – 5
	33 – 34
4B5–25855–00	33 – 4
	33 – 33
2PW–25867–00	33 – 11
BC3–25873–01	33 – 15
BC3–25874–00	33 – 14
BC3–25875–00	33 – 23
BC3–25876–00	33 – 27
BC3–2587A–00	22 – 36
BC3–25886–00	33 – 48
BC3–25887–00	33 – 16
5VS–2589F–00	33 – 7
	33 – 36
5VS–2589H–00	33 – 6
	33 – 35
59C–25914–00	31 – 6
59C–25914–50	31 – 18
1UY–25917–51	31 – 20
13S–25919–00	29 – 9
	29 – 20
5JW–25919–00	31 – 9
2PW–25921–50	31 – 24
4SV–25924–00	29 – 10
	29 – 21
3GM–25925–00	29 – 11
	29 – 22

PART NO.	REF. NO.
1UY–25926–51	31 – 21
4TT–25937–00	31 – 7
1UY–25937–51	31 – 23
1UY–25938–51	31 – 22
5GM–25975–00	31 – 12
5VS–25975–00	29 – 25
2PW–259A0–00	31 – 13
59C–259A3–00	31 – 16
59C–259A4–00	31 – 17
4B5–26031–00	36 – 17
B7M–26110–00	32 – 1
BC3–2612E–00	33 – 24
BC3–2612K–00	33 – 28
4B5–26131–00	32 – 28
BC3–26143–00	32 – 17
BC3–26145–00	32 – 11
BC3–26216–A0	32 – 15
BC3–26217–00	32 – 21
BC3–26246–00	32 – 6
BC3–26250–10	23 – 15
BC3–26279–00	32 – 26
BC3–26280–00	37 – 51
59C–2628N–00	37 – 52
59C–2628R–00	37 – 55
BC3–26290–00	37 – 54
BC3–26311–00	32 – 7
BC3–26312–00	32 – 8
5VS–26332–00	33 – 10
	33 – 41
BC3–26396–00	43 – 8
B7M–27111–00	34 – 15
36C–27114–00	34 – 21
BC3–27114–00	34 – 32
BC3–27151–00	34 – 20
B7M–27152–00	34 – 24
BC3–27180–01	44 – 36
59C–27311–00	34 – 29
BC3–27321–00	34 – 28
2PW–27413–00	35 – 29
2PW–27423–00	35 – 30
B7M–27424–00	10 – 20
36Y–27424–01	10 – 17
B7M–27431–00	34 – 1
4B5–27437–00	34 – 7
	34 – 14
B7M–27441–00	34 – 8
B7M–27453–01	35 – 2
B7M–27463–01	35 – 14

PART NO.	REF. NO.
BC3–27481–00	35 – 1
2PW–27483–00	35 – 27
2PW–27484–00	35 – 28
BC3–27488–00	35 – 13
BC3–27493–00	35 – 31
BC3–27494–00	35 – 32
BC3–27883–00	30 – 13
BC3–27982–00	32 – 31
2PW–28100–10	26 – 19
1RC–28135–00	26 – 22
B88–2817K–20	21 – 53
B3T–28199–E0	26 – 21
B3T–28199–F0	26 – 21
B3T–28199–G0	26 – 21
B3T–28199–H0	26 – 21
B3T–28199–S0	26 – 21
BC3–28227–00	36 – 25
BC3–28237–00	37 – 23
BC3–28306–00	37 – 10
BC3–28311–00	36 – 11
BC3–28313–00	36 – 18
BC3–28320–00	18 – 25
B7M–28331–00	37 – 30
BC3–28336–00	18 – 29
BC3–28345–A0	36 – 38
BC3–28346–A0	36 – 39
BC3–28349–00	37 – 43
BC3–2834V–00	36 – 31
BC3–28351–00–P4	37 – 6
BC3–28351–00–P7	37 – 6
BC3–28356–00	18 – 22
BC3–2835P–00	37 – 16
B7M–2835U–00–P0	36 – 40
B7M–2835U–00–P1	36 – 40
B7M–2835V–00–P0	36 – 44
B7M–2835V–00–P1	36 – 44
B7M–2835X–00	32 – 24
B7M–28365–00	36 – 48
8GC–2836B–02	32 – 22
BC3–2836K–00	37 – 1
BC3–2836L–00	37 – 21
BC3–2836T–00	36 – 22
BC3–28377–00–P4	37 – 12
BC3–28377–00–P7	37 – 12
BC3–2837L–00	35 – 9
BC3–2837M–00	35 – 23
BC3–2837U–00	37 – 34
5GJ–2839M–00	27 – 4

PART NO.	REF. NO.
BC3–28427–00	37 – 31
BC3–2842A–00	37 – 45
BC3–2842M–00	36 – 36
BC3–28437–00	37 – 32
BC3–2843C–00	37 – 48
2C0–2847N–00	40 – 6
59C–46153–00	22 – 23
BC3–46241–01	22 – 50
JX4–78329–00	37 – 47
	37 – 50
BC3–81410–00	38 – 1
B7M–81450–00	38 – 2
BC3–81815–00	14 – 14
4B5–81826–00	14 – 9
4XV–8182A–00	14 – 13
	14 – 16
4B5–81840–00	14 – 8
4B5–81844–00	14 – 10
1FK–81847–00	14 – 11
3TB–81847–00	14 – 12
1MC–81860–00	23 – 18
59C–81860–01	44 – 41
4B5–81871–00	14 – 15
BC3–81890–00	14 – 7
BC3–81940–00	44 – 6
1ST–81950–00	44 – 46
5JJ–81950–11	44 – 48
5JJ–81952–00	44 – 47
5VX–81960–00	44 – 12
3WP–81980–00	44 – 16
4WA–81980–00	44 – 15
2DF–82021–00	44 – 52
23P–82100–00	44 – 3
BC3–82116–00	44 – 9
5SL–82119–10	44 – 8
BC3–82121–00	44 – 5
B7M–8212B–00	18 – 31
BC3–8212C–00	18 – 39
3TJ–82131–00	26 – 20
137–82131–01	44 – 2
	44 – 4
1MC–82151–00	44 – 22
5EA–82151–00	44 – 7
5JJ–82151–00	44 – 17
5JJ–82151–10	44 – 18
5JJ–82151–20	44 – 20
5JJ–82151–60	44 – 21
5JJ–82151–80	44 – 19

PART NO.	REF. NO.
BC3–82310–01	45 – 6
BC3–82361–00	32 – 10
B7M–82370–00	45 – 5
1WS–82380–00	45 – 8
2DF–82511–09	44 – 53
BC3–8252U–00	44 – 38
BC3–8254B–00	36 – 29
BC3–82566–00	44 – 29
5PS–82576–01	44 – 43
B7M–82590–00	44 – 14
1UA–82591–00	25 – 21
	44 – 23
3MA–82591–00	27 – 22
	44 – 24
B7M–82617–00	43 – 6
BC3–82627–00	43 – 15
BC3–82917–00	33 – 39
B7M–82960–00	32 – 4
BC3–82963–00	32 – 3
BC3–83306–00	37 – 35
B7M–83310–00	39 – 3
B7M–83320–00	39 – 4
BC3–83330–00	39 – 1
BC3–83340–00	39 – 2
BC3–83371–10	45 – 10
BC3–83383–00	45 – 14
B7M–83500–00	40 – 1
B7M–83500–10	40 – 1
BC3–83511–01	40 – 2
4XV–83513–00	18 – 26
5PS–83513–00	41 – 9
BC3–83572–00	40 – 3
4P9–83591–00	1 – 23
2PW–83912–00	33 – 38
2PW–83922–00	33 – 9
5VU–83930–00	43 – 10
BC3–83954–00	43 – 3
BC3–83972–11	43 – 13
BC3–83980–00	33 – 12
BC3–84118–00	18 – 23
2PW–84192–00	41 – 4
B7M–84300–00	41 – 2
BC3–8431U–00	46 – 18
4WV–84345–00	37 – 46
	37 – 49
1TP–84347–00	20 – 42
4HC–84347–00	27 – 3
B7M–84359–00	41 – 12

PART NO.	REF. NO.
B7M–84710–00	42 – 1
BC3–84740–00	20 – 41
4HC–84770–00	27 – 2
2PW–85112–00	45 – 2
2PW–85122–00	45 – 3
3Y6–85130–02	20 – 47
59C–85131–00	45 – 1
B7M–85490–00	41 – 3
2PW–85546–00	44 – 54
1MC–85884–00	23 – 16
B7M–85885–00	9 – 9
5YU–85886–00	45 – 12
B7M–8591A–00	44 – 1
BC3–8592A–10	10 – 19
B7M–85930–09	46 – 1
BC3–85970–00	46 – 11
BC3–85980–00	46 – 14
BC3–85991–00	46 – 6
BC3–86111–00	21 – 3
BC3–86111–10	36 – 30
B7M–86261–00	44 – 50
B7M–86265–00	44 – 51
B3T–F8199–D0	26 – 21
B3T–F8199–M0	26 – 21
B3T–F8199–P0	26 – 21
BC3–W2341–00	23 – 8
BC3–W283B–02	36 – 20
BC3–W28AL–02	36 – 21
B7M–W862A–00	44 – 49
90101–08013	22 – 9
	22 – 12
90101–10046	34 – 26
90101–12060	22 – 70
90105–05025	43 – 7
	43 – 16
90105–06027	1 – 3
90105–06127	18 – 55
	18 – 57
90105–06181	22 – 37
90105–08054	27 – 14
	27 – 18
90105–08073	18 – 35
90105–08129	18 – 37
90105–08440	31 – 29
90105–08M35	18 – 51
	18 – 53
90105–10211	23 – 14
90105–10220	22 – 63

PART NO.	REF. NO.
90105–10237	30 – 15
90105–10283	34 – 22
	34 – 25
90105–10318	22 – 68
90105–10440	29 – 26
90105–12052	18 – 12
90105–12109	18 – 8
	18 – 11
90105–14002	28 – 14
90109–05012	32 – 16
90109–05018	35 – 10
	35 – 24
	36 – 15
90109–05019	42 – 3
90109–060G4	44 – 34
90109–06264	6 – 22
	36 – 5
90109–06295	4 – 9
90109–08261	44 – 35
	44 – 37
90109–083G4	29 – 2
90109–10027	22 – 55
90109–10067	34 – 18
90110–06021	1 – 13
90110–06036	16 – 30
90110–06043	25 – 13
90110–06163	22 – 20
90110–06168	7 – 5
	7 – 12
90110–06173	18 – 24
90110–06200	21 – 40
	21 – 46
90110–06379	1 – 14
90110–10046	18 – 7
90111–05045	20 – 28
	20 – 32
90111–05049	19 – 3
90111–06015	10 – 8
	10 – 14
90111–06064	30 – 14
90111–06066	10 – 5
90111–06089	20 – 4
	20 – 51
90111–06092	18 – 46
	44 – 40
90111–06116	22 – 45
90111–06140	19 – 16
90111–06183	10 – 32

PART NO.	REF. NO.
90111–10007	34 – 33
90111–10026	2 – 20
90116–09584	1 – 8
90119–06156	19 – 11
	37 – 26
	41 – 11
90119–06230	21 – 26
90119–06235	35 – 3
	35 – 17
90119–06270	5 – 17
90119–06M83	5 – 12
90119–08112	18 – 43
90149–05029	28 – 6
	30 – 8
90149–06082	12 – 5
	38 – 4
90149–06093	38 – 3
90149–06117	19 – 2
	19 – 12
90149–06233	24 – 43
90149–08009	31 – 2
90149–08030	14 – 6
90149–08055	18 – 3
90151–06024	16 – 12
90154–05006	37 – 41
90159–05032	32 – 2
90159–06021	36 – 13
90159–06022	36 – 27
90160–05013	8 – 4
90160–05015	21 – 15
90167–05076	20 – 36
	20 – 39
	32 – 18
	36 – 6
90167–05079	20 – 8
	21 – 24
	32 – 13
	32 – 23
	36 – 49
	37 – 24
90169–05001	36 – 16
90169–05006	18 – 28
90170–16326	15 – 20
90170–18221	16 – 23
90170–28419	23 – 7
90170–36279	16 – 22
90170–48003	15 – 6
90176–06017	13 – 17

PART NO.	REF. NO.
90176–09001	1 – 12
90176–10075	10 – 26
90179–05003	37 – 42
90179–06018	31 – 28
90179–07652	2 – 4
90179–08442	10 – 23
90179–09379	2 – 8
90179–09612	1 – 11
90179–18007	2 – 22
90179–20013	16 – 13
90179–30006	23 – 3
90183–05042	20 – 2
	20 – 10
	20 – 16
	21 – 2
	21 – 18
	21 – 20
	21 – 48
	21 – 51
	32 – 14
	32 – 19
	35 – 6
	35 – 12
	35 – 20
	35 – 26
	36 – 10
	36 – 14
	36 – 19
	36 – 42
	36 – 46
	37 – 8
	37 – 14
	42 – 4
90183–05076	21 – 39
	21 – 45
	27 – 6
	32 – 12
	32 – 20
	37 – 27
	37 – 29
90183–050A6	19 – 6
	19 – 9
90183–05M02	21 – 14
	36 – 33
90183–06069	18 – 38
	18 – 44
	41 – 5
90183–060A6	19 – 5

PART NO.	REF. NO.
90183–060A6	19 – 8
	20 – 6
	35 – 7
	35 – 21
	36 – 24
	37 – 7
	37 – 13
90185–10012	34 – 37
90185–10022	10 – 27
	34 – 23
	34 – 27
90185–10060	34 – 19
90185–24002	30 – 20
90201–04325	44 – 45
90201–06033	6 – 14
90201–06118	46 – 3
90201–062G3	10 – 6
	10 – 15
90201–08103	27 – 9
90201–087F0	18 – 33
90201–090P4	1 – 10
90201–10035	22 – 58
	34 – 36
90201–10043	23 – 11
90201–10051	34 – 35
90201–10071	10 – 28
90201–10078	18 – 17
90201–10669	10 – 24
90201–12034	22 – 71
90201–13015	22 – 57
90201–22018	22 – 25
90201–24017	15 – 19
90201–244A9	15 – 3
90201–25020	30 – 21
90201–25290	14 – 5
90201–28017	23 – 6
90202–30235	23 – 4
90249–12004	31 – 27
90269–03001	36 – 35
90269–05001	25 – 20
90269–05009	13 – 2
90269–06001	22 – 49
90269–06008	20 – 3
	20 – 14
	20 – 20
	20 – 23
	21 – 22
	21 – 49

PART NO.	REF. NO.
90269–06008	21 – 52
	36 – 7
	36 – 9
	37 – 20
	37 – 25
90269–06010	9 – 16
90269–06019	20 – 13
	20 – 19
	21 – 36
	21 – 42
90269–07007	37 – 2
90269–07014	6 – 23
90269–07076	18 – 49
90269–08007	37 – 44
90280–05048	2 – 24
90338–10132	36 – 26
90338–36004	20 – 21
90387–05042	20 – 43
90387–06065	6 – 13
90387–06107	18 – 40
	37 – 38
90387–06130	44 – 39
90387–06141	10 – 13
90387–06153	19 – 13
90387–06161	41 – 8
90387–062U9	25 – 3
90387–06317	10 – 4
90387–06323	46 – 8
90387–06324	46 – 4
90387–06325	19 – 15
90387–06372	22 – 41
	22 – 44
	22 – 47
90387–064H8	34 – 6
	34 – 13
90387–065L7	6 – 12
90387–06681	21 – 27
90387–08068	27 – 12
	27 – 16
90387–08079	19 – 14
90387–085E1	18 – 34
90387–10020	34 – 34
90387–10046	10 – 18
90387–10100	18 – 42
90387–10114	18 – 36
90387–127W0	22 – 62
90387–17011	22 – 29
90387–18001	2 – 23

PART NO.	REF. NO.
90387–20018	15 – 4
90387–22016	28 – 12
90387–22030	28 – 13
90387–26001	16 – 25
90401–10020	33 – 19
	33 – 20
	33 – 46
90401–10038	33 – 21
90401–20009	7 – 19
90413–06031	25 – 35
90430–08119	1 – 6
	11 – 13
90430–10004	1 – 24
90430–10005	33 – 22
	33 – 47
90445–05003	37 – 40
90445–217G3	34 – 31
90450–01002	13 – 4
90450–32015	6 – 1
90450–46005	8 – 15
90450–56009	9 – 18
90450–74001	13 – 5
90464–07018	20 – 11
	20 – 17
	20 – 29
	20 – 33
90464–08126	18 – 59
90464–09130	18 – 58
90464–10M52	25 – 31
90464–12001	33 – 25
	37 – 37
90464–12013	46 – 13
90464–12018	44 – 26
90464–13073	44 – 57
90464–13133	33 – 29
90464–14003	46 – 17
90464–14013	33 – 45
90464–15014	25 – 19
90464–16003	41 – 1
90464–16006	32 – 25
	32 – 30
90464–16012	33 – 44
90464–23001	6 – 30
90464–25009	43 – 2
90464–25160	27 – 7
	36 – 28
90464–28175	6 – 18
90464–30010	44 – 25

PART NO.	REF. NO.
90464–30011	44 – 56
90465–10098	20 – 52
	32 – 5
	33 – 18
	43 – 1
	46 – 16
90467–09006	25 – 36
90467–090A2	21 – 33
	25 – 30
90467–10008	21 – 34
90467–10038	6 – 27
90467–110A3	25 – 28
90467–11106	8 – 14
90467–15001	6 – 26
	8 – 17
90467–15054	8 – 12
90468–040A0	22 – 42
90468–16001	26 – 18
90480–01559	35 – 8
	35 – 22
	41 – 10
90480–10334	21 – 28
90480–11009	20 – 44
90480–12581	10 – 3
	10 – 12
90480–13032	46 – 7
90480–13033	46 – 2
90480–15363	6 – 15
90480–16301	6 – 11
90501–05512	21 – 12
90501–104F9	7 – 16
90501–110A0	15 – 14
90501–15001	34 – 4
	34 – 11
90501–620A1	16 – 19
90506–23014	34 – 30
90506–40007	34 – 16
90520–04016	13 – 23
90520–10015	36 – 4
90520–10036	8 – 16
90520–20009	35 – 15
90520–20011	35 – 16
91312–04025	44 – 44
91312–05010	21 – 4
	25 – 11
91312–05020	45 – 9
91312–06016	9 – 19
91312–06020	5 – 9

PART NO.	REF. NO.
91312–06025	4 – 6
91312–06035	1 – 19
91312–08020	22 – 3
91312–08030	23 – 13
	24 – 38
91314–08040	24 – 18
	24 – 36
91380–06012	44 – 10
91402–20012	34 – 2
	34 – 9
91702–06038	34 – 3
	34 – 10
91808–16023	1 – 4
92012–05020	44 – 30
92012–06010	23 – 25
	25 – 26
	26 – 13
92012–06012	24 – 45
	27 – 25
	27 – 27
	33 – 17
	46 – 10
92012–06014	13 – 10
92012–06016	46 – 9
92012–06020	46 – 5
92012–06050	7 – 2
92012–08012	26 – 15
92014–06012	20 – 27
	20 – 31
92902–05600	27 – 24
93101–30001	2 – 26
93101–35001	16 – 2
93102–12442	5 – 4
93102–15004	16 – 32
93102–25017	22 – 28
93102–25064	17 – 10
93102–30284	22 – 8
93102–35023	22 – 16
93102–42004	16 – 27
93102–44008	2 – 27
93102–55004	22 – 7
93104–41119	16 – 16
93106–28043	28 – 4
93106–40013	30 – 5
93106–40027	30 – 6
93109–17071	22 – 61
93210–06422	7 – 4
93210–09525	7 – 9

PART NO.	REF. NO.
93210–10096	7 – 22
93210–14579	7 – 11
93210–16325	12 – 10
93210–19123	12 – 15
93210–21006	17 – 6
93210–21190	5 – 16
93210–22382	11 – 11
93210–26001	16 – 26
93210–30611	16 – 9
93210–33133	5 – 11
93210–44545	16 – 17
93210–48364	11 – 9
93210–50553	22 – 2
93306–00106	5 – 3
93306–00713	16 – 10
93306–07208	28 – 3
93306–07809	30 – 3
93306–205A8	17 – 9
93306–205B5	30 – 2
93306–20651	16 – 28
93306–20662	22 – 15
93306–30102	15 – 21
93306–30217	16 – 33
93306–30427	17 – 4
93306–90602	2 – 25
93315–31758	22 – 59
93315–41774	22 – 60
93317–32493	15 – 2
93332–00010	22 – 27
93332–00086	22 – 4
93399–99932	23 – 1
93399–99957	24 – 39
93430–02001	21 – 9
93430–09038	26 – 8
93450–16068	2 – 18
93450–18157	2 – 15
93501–04011	34 – 5
	34 – 12
93505–08030	7 – 15
93608–60001	2 – 21
93612–16254	1 – 9
	1 – 22
93900–00025	28 – 8
93900–00030	30 – 10
94112–15012	28 – 7
94116–15019	30 – 9
94580–25058	7 – 7
94591–53134	4 – 3
94701–00443	1 – 15
95022–06008	44 – 11
95022–06010	44 – 28
95022–06014	46 – 12
	46 – 15
95022–08035	23 – 22
95022–08110	11 – 5
95022–08120	11 – 6
95302–08600	22 – 10
	22 – 13
95602–05200	20 – 45
	44 – 31
95602–06200	26 – 5
	26 – 11
95602–08200	26 – 10
95602–10100	23 – 12
95602–10200	18 – 15
	22 – 64
	22 – 69
95602–12200	18 – 13
	22 – 72
95607–05200	20 – 48
95612–08618	1 – 7
95612–10100	22 – 56
95617–06100	33 – 8
	33 – 37
95702–05500	45 – 4
95702–06500	19 – 19
	37 – 36
95702–10500	18 – 30
95812–06016	18 – 19
95812–06040	18 – 20
95D02–06016	18 – 41
95D32–06010	32 – 29
95D32–06012	18 – 27
	22 – 35
	32 – 27
	32 – 32
	33 – 49
	45 – 11
	46 – 19
95D32–06014	22 – 48
	23 – 20
95D32–06016	20 – 54
	27 – 20
	37 – 53
	37 – 56
95D32–06020	18 – 21
95D32–06020	37 – 39
	44 – 13
	45 – 7
95D32–06025	14 – 17
	25 – 5
	41 – 7
95D32–06030	19 – 18
95D32–06035	19 – 17
95D32–08020	27 – 8
95D32–10025	22 – 32
95D32–10040	10 – 25
95D32–10090	22 – 33
95D32–10100	22 – 31
95D37–10025	18 – 16
95E32–06020	6 – 4
95E32–06035	11 – 3
	12 – 8
	12 – 13
	13 – 18
95E32–06050	11 – 4
95E32–08012	1 – 5
	11 – 12
95E32–08025	13 – 15
95E32–08040	13 – 14
97002–05010	27 – 23
97602–04214	33 – 13
	33 – 40
97702–30016	40 – 4
97702–50012	20 – 24
	20 – 35
	20 – 38
	21 – 16
	21 – 21
	21 – 37
	21 – 43
	35 – 4
	35 – 11
	35 – 18
	35 – 25
	36 – 41
	36 – 45
	37 – 9
	37 – 11
	37 – 15
	37 – 17
	37 – 19
	42 – 2
97702–50016	21 – 38
97702–50016	21 – 44
	35 – 5
	35 – 19
	36 – 23
	36 – 32
	40 – 5
97702–50516	45 – 13
97707–50012	20 – 5
	36 – 34
	36 – 37
97707–50014	39 – 5
98507–05012	43 – 12
98507–05040	43 – 4
98507–05050	43 – 14
98507–05055	43 – 5
98517–05020	32 – 9
98902–03008	44 – 42
98980–06008	10 – 10
99009–12400	5 – 10
99009–25400	17 – 8
99009–30400	22 – 22
99009–42500	16 – 31
99009–62500	22 – 21
99480–08020	13 – 13
99530–10114	11 – 2
	12 – 7
	12 – 12
99530–14016	22 – 30